TM 5-3655-215-25P

TECHNICAL MANUAL

ORGANIZATIONAL, DIRECT AND GENERAL SUPPORT, AND DEPOT MAINTENANCE REPAIR PARTS AND SPECIAL TOOLS LIST

COOLING TOWER, LIQUID, 4 SECTIONS, 240 GPM, SEMI-TRAILER MOUNTED (AMERICAN AIR FILTER MODEL CT-250) FSN 3655-411-5439

RETURN TO

HEADQUARTERS, DEPARTMENT OF THE ARMY

FEBRUARY 1971

CHANGE No. 1

HEADQUARTERS
DEPARTMENT OF THE ARMY
WASHINGTON, D. C., *30 June 1971*

Organizational, Direct and General Support, and Depot Maintenance Repair Parts and Special Tools List

COOLING TOWER, LIQUID, 4 SECTIONS, 240 GPM, SEMI-TRAILER MOUNTED (AMERICAN AIR FILTER MODEL CT-250) FSN 3655-411-5439

Current as of 27 April 1971

TM 5-3655-215-25P, 4 February 1971, is changed as follows:

Page vi. Paragraph 6, change spelling of the following Manufacturers' names:

Manufacturers' names:

73124—Hayward Mfg. Co. Inc.

80996—Grinnell Corp.

90914—Homan and Co., Inc.

Delete the following Manufacturers' Code:

03993—Case Power and Equipment Co.

Add the following Manufacturers' Code in appropriate sequence:

03933—Armstrong Machine Works

All changes, additions, or deletions of Federal Stock Numbers or Manufacturers' Part Numbers within this change should be appropriately reflected in the listing and index of the manual.

Line	Action	(1) Federal stock No.	(2) Description Usable on code	(3) 15-Day Org Maint Alw (A) 1-5	(B) 6-20	(C) 21-50	(D) 51-100
			SECTION II—PRESCRIBED LOAD ALLOWANCE				
			GROUP 02—COOLING TOWER ELECTRICAL SYSTEM				
2	Ch col 2		SWITCH, ROTARY WT1S10T1LA (79500)				
			GROUP 03—MAKE-UP WATER SYSTEM				
4	Add col 1	4820-845-1096	VALVE, DRAIN 6660 (79470)				
			GROUP 04—COOLING TOWER WATER SYSTEM				
3	Add col 1	6685-446-8821	GAGE, PRESSURE TYPE 1PCPSR6-60LB (38508)				
4	Add col 1	4820-849-1120	VALVE, DRAIN 140 (79470)				
6	Add col 1	6685-782-5247	GAGE, TEMPERATURE 4750MS2-20T0240 (76526)				
			GROUP 05—COOLING TOWER				
1	Ch col 2		NOZZLE, SPRAY 6KW (56308)				
			GROUP 06—TRAILER ASSEMBLY				
15	Add col 1	6210-111-6956	LENS, RED 42012 (71951)				

Page	Line	Action	(1) SMR code	(2) Federal stock No.	(3) Description Reference No. & Mfr. code Usable on code	(4) Unit of issue	(5) Qty inc in unit	(6) 15-Day organizational maint allowances (a)	(b)	(c)	(d)	(7) Illustration (a) Fig No.	(b) Item or symbol No.
					SECTION III—REPAIR PARTS FOR ORGANIZATIONAL MAINTENANCE								
					GROUP 03—MAKE-UP WATER SYSTEM								
5	3	Add col 2		4820-845-1096	VALVE, DRAIN: treatment * * * 6660 (79470)								
					GROUP 04—COOLING TOWER WATER SYSTEM								
	2	Add col 2		6685-782-5247	GAGE, TEMPERATURE 4750MS2-20T0240 (76526)								
	7	Add col 2		6685-446-8821	GAGE, PRESSURE: 1-4NPT * * * TYPE 1PCPSR6-60LB (38508)								
	8	Add col 2		4820-845-1096	VALVE, DRAIN: strainer 6660 (79470)								
6	4	Add col 2, ch col 6		4820-849-1120	VALVE, DRAIN: foot valve 140 (79470)			*	*	*	1		
	9	Add col 2		6685-782-5247	GAGE, TEMPERATURE: water * * * 4750MS2-20T0240 (76526)								
	14	Add col 2		6685-446-8821	GAGE, PRESSURE: 1-4NPT * * * TYPE 1PCPSR6-60LB (38508)								
					GROUP 06. TRAILER ASSEMBLY								
8	20	Add col 2		6210-111-6866	LENS, RED [illegible]								

Page	Line	Action	(1) SMR code index No.	(2) Federal stock No.	(3) Description: Reference No. & Mfr. code / Usable on code	(4) Unit of issue	(5) Qty inc in unit	(6) 30-Day DS maint allowance (a) 1-20	(b) 21-50	(c) 51-100	(7) 30-Day GS maint allowance (a) 1-20	(b) 21-50	(c) 51-100	(8) 1-Yr alw per 100 equip cntgcy	(9) Depot maint alw per 100 equip	(10) Illustration (a) Fig. No.	(b) Item No.
					SECTION V—REPAIR PARTS FOR DS, GS AND DEPOT MAINTENANCE												
					GROUP 01—ACCESSORIES												
13	13	Add col 2		5305-989-7435	SCREW, MACHINE: latch * * * MS35207-264 (96906)												
					GROUP 02—COOLING TOWER ELECTRICAL SYSTEM												
16	18	Add col 2		5925-232-2842	CIRCUIT BREAKER: water * * * EHB3030 (79500)												
	19	Add col 2		5925-232-2840	CIRCUIT BREAKER: blower * * * EHB3015 (79500)												
					GROUP 03—MAKE-UP WATER SYSTEM												
20	7	Add col 2		5330-404-4620	PACKING, PREFORMED 1C4157-0699 (22508)												
21	2	Add col 2		4820-845-1096	VALVE DRAIN: treatment tank 6660 (79470)												
					GROUP 04—COOLING TOWER WATER SYSTEM												
	2	Add col 2		6685-782-5247	GAGE, TEMPERATURE 4750MS2-20T0240 (76526)												
	7	Add col 2		6685-446-8821	GAGE, PRESSURE: 1-4NPT * * * TYPE 1PCPSR6-60LB (38508)												
22	11	Add col 2		4820-845-1096	VALVE, DRAIN: strainer 6660 (79470)												
24	7	Add col 2		4820-849-1120	VALVE, DRAIN: foot valve 140 (79470)												
27	11	Add col 2		6685-782-5247	GAGE, TEMPERATURE: water * * * 4750MS2-20T0240 (76526)												
	16	Add col 2		6685-446-8821	GAGE, PRESSURE: 1-4NPT * * * TYPE 1PCPSR6-60LB (38508)												
					GROUP 06—TRAILER ASSEMBLY												
32	23	Add col 2		6120-111-6956	LENS, RED 42012 (71951)												
35	16	Add col 2		2530-236-6355	BRAKE CHAMBER ASSEMBLY 11784B (98343)												

Pages 46-88. Add figure number and caption as follows:

Page 46.

Figure 1. Power cube and grounding rod.

Page 47.

Figure 2. Storage box.

Page 48.

Figure 3. Conduit and wiring.

Page 49.

Figure 4. Control panel switches and lights.

Page 50.

Figure 5. Control panel components.

Page 51.

Figure 6. Make-up water lines and valves.

Page 52.

Figure 7. Float valve.

Page 53.

Figure 8. Water line strainer.

Page 54.

Figure 9. Gate valve, water line.

Page 55.

Figure 10. Treatment tank, water.

Page 56.

Figure 11. Water outlet lines and gages.

Page 57.

Figure 12. Duplex strainer.

Page 58.

Figure 13. Water pump suction line.

Page 59.

Figure 14. Suction foot valve.

Page 60.

Figure 15. Circulating water pump assembly.

Page 61.

Figure 16. Circulating pump motor.

Page 62.

Figure 17. Water manifold, right hand.

Page 63.

Figure 18. Water manifold and gages, left hand.

Page 64.

Figure 19. Manifold gate valve.

Page 65.

Figure 20. Blower fan installation.

Page 66.

Figure 21. Blower axial fan tube.

Page 67.

Figure 22. Blower fan motor.

Page 68.

Figure 23. Ladder and spray header access.

Page 69.

Figure 24. Spray header, demister and filter.

Page 70.

Figure 25. Air shutter.

Page 71.

Figure 26. Cooling tower inclosure.

Page 72.

Figure 27. Trailer assembly.

Page 73.

Figure 28. Splash guard.

Page 74.

Figure 29. Clearance lights.

Page 75.

Figure 30. Stop and tail light.

Page 76.

Figure 31. Blackout lights.

Page 77.

Figure 32. Electrical connector.

Page 78.

Figure 33. Junction box.

Page 79.

Figure 34. Pintle hook.

Page 80.

Figure 35. Air brake connections.

Page 81.

Figure 36. Air brake components.

Page 82.

Figure 37. Brake chamber.

Page 83.

Figure 38. Wiring harness.

Page 84.

Figure 39. Hub and brake drum assembly.

Page 85.

Figure 40. Brake assembly.

Page 86.

Figure 41. Axle bar assembly.

Page 87.

Figure 42. Suspension assembly.

Page 88.

Figure 43. Landing gear leg assembly.

By Order of the Secretary of the Army:

W. C. WESTMORELAND,
General, United States A
Chief of Staff.

Official:

VERNE L. BOWERS,
Major General, United States Army,
The Adjutant General.

Distribution:

To be distributed in accordance with DA Form 12-25 (qty rqr block No. 126) Organizational Maintenance requir for Equipment: Gas Generating.

TECHNICAL MANUAL
No. 5-3655-215-25P

HEADQUARTERS
DEPARTMENT OF THE ARMY
WASHINGTON, D. C., *4 February 1971*

ORGANIZATIONAL, DIRECT AND GENERAL SUPPORT, AND DEPOT MAINTENANCE REPAIR PARTS AND SPECIAL TOOLS LIST

COOLING TOWER, LIQUID, 4 SECTIONS, 240 GPM, SEMI-TRAILER MOUNTED (AMERICAN AIR FILTER MODEL CT-250) FSN 3655-411-5439

Current as of 27 January 1971

		Listing Page	Illus Figure
SECTION I.	INTRODUCTION	iii	
II.	PRESCRIBED LOAD ALLOWANCE	1	
III.	REPAIR PARTS FOR ORGANIZATIONAL MAINTENANCE	3	
Group 01.	Accessories	3	
	Power cube and grounding rod		1
	Storage box		2
02.	Cooling Tower Electrical System	3	
	Conduit and wiring		3
	Control panel switches and lights		4
	Control panel components		5
03.	Make-Up Water System	4	
	Make-up water lines and valves		6
	Water line strainer		8
	Gate valve, water line		9
	Treatment tank, water		10
04.	Cooling Tower Water System	5	
	Water outlet lines and gages		11
	Duplex strainer		12
	Water pump suction line		13
	Water manifold and gages, left hand		18
	Manifold gate valve		19
05.	Cooling Tower	6	
	Blower fan installation		20
	Ladder and spray header access		23
	Spray header, demister and filter		24
	Cooling tower inclosure		26
06.	Trailer Assembly	7	
	Trailer assembly		27
	Splash guard		28
	Clearance lights		29
	Stop and tail light		30
	Blackout lights		31
	Electrical connector		32
	Junction box		33
	Pintle hook		34
	Air brake connections		35
	Air brake components		36
	Wiring harness		38

		Listing Page	Illu Figu
	Hub and brake drum assembly		39
	Brake assembly		40
	Axle bar assembly		41
	Landing gear leg assembly		4[illegible]
SECTION IV.	SPECIAL TOOLS, TEST AND SUPPORT EQUIPMENT (Not Applicable)		
V.	REPAIR PARTS FOR DS, GS, AND DEPOT MAINTENANCE	13	
Group 01.	Accessories	13	
	Power cube and grounding rod		1
	Storage box		2
02.	Cooling Tower Electrical System	13	
	Conduit and wiring		3
	Control panel switches and lights		4
	Control panel components		5
03.	Make-Up Water System	17	
	Make-up water lines and valves		6
	Float valve		7
	Water line strainer		8
	Gate valve, water line		9
	Treatment tank, water		10
04.	Cooling Tower Water System	21	
	Water outlet lines and gages		11
	Duplex strainer		12
	Water pump suction line		13
	Suction foot valve		14
	Circulating water pump assembly		15
	Circulating pump motor		16
	Water manifold, right hand		17
	Water manifold and gages, left hand		18
	Manifold gate valve		19
05.	Cooling Tower	28	
	Blower fan installation		20
	Blower axial fan tube		21
	Blower fan motor		22
	Ladder and spray header access		23
	Spray header, demister and filter		24
	Air shutter		25
	Cooling tower inclosure		26
06.	Trailer Assembly	31	
	Trailer assembly		27
	Splash guard		28
	Clearance lights		29
	Stop and tail light		30
	Blackout lights		31
	Electrical connector		32
	Junction box		33
	Pintle hook		34
	Air brake connections		35
	Air brake components		36
	Brake chamber		37
	Wiring harness		38
	Hub and brake drum assembly		39
	Brake assembly		40
	Axle bar assembly		41
	Suspension assembly		42
	Landing gear leg assembly		43
07.	Kits and Sets	44	
SECTION VI.	SPECIAL TOOLS, TEST AND SUPPORT EPUIPM9NT (Not Applicable)		
VII.	FEDERAL STOCK NUMBER AND REFERENCE NUMBER INDEX	89	

SECTION I.

INTRODUCTION

1. Scope

This manual lists repair parts required for the performance of organizational, direct support, general support, and depot maintenance of the cooling tower.

2. General

This Repair Parts List is divided into the following sections:

a. Prescribed Load Allowance (PLA)—Section II. A listing of repair parts having quantitative allowances for initial stockage at the organizational level.

b. Repair Parts—Section III. A list, in figure and item number sequence, of repair parts authorized at the organizational level for the performance of maintenance, including those items which must be removed for replacement of the authorized item. Items, except kits and sets, are listed by assembly group in top down breakdown sequence. Repair parts kits and sets are listed separately as Group 7 at the end of this section without regard to the assembly group to which they belong.

c. Special Tools, Test and Support Equipment—Section IV. (Not applicable.)

d. Repair Parts—Section V. A list, in figure and item number sequence, of the repair parts authorized for the performance of maintenance at the direct support, general support, and depot levels, including those items which must be removed for replacement of the authorized item. Items, except kits and sets, are listed by assembly group in top down breakdown sequence. Repair parts kits and sets are listed separately as Group 7 at the end of this section without regard to the assembly group to which they belong.

e. Special Tools, Test and Support Equipment—Section VI. (Not applicable.)

f. Federal Stock Number and Reference Number Index—Section VII. A list of Federal Stock Numbers in ascending numerical sequence, followed by a list of reference numbers appearing in all listings, in ascending alpha-numeric sequence, cross-referenced to the illustration figure and item number.

NOTE

Items not illustrated are cross-referenced to assembly group number.

3. Explanation of Columns

The following provides an explanation of columns in the tabular lists in Sections II through VI.

a. Source, Maintenance, and Recoverability Codes (SMR).

(1) Source code indicates the source for the listed items. Source codes are:

Code	*Explanation*
P	Repair Parts supplied from the GSA/DSA, or Army supply system, and authorized for use at indicated maintenance categories.
P2	Repair Parts which are procured and stocked for insurance purposes because the combat or military essentiality of the end item dictates that a minimum quantity be available in the supply system.
M	Repair Parts, Special Tools and Test Equipment which are not procured or stocked, as such, in the supply system but are to be manufactured at indicated maintenance levels.
A	Assemblies which are not procured or stocked as such, but are made up of two or more units. Such component units carry individual stock numbers and descriptions, are procured and stocked separately and can be assembled to form the required assembly at indicated maintenance categories.
X	Parts and assemblies that are not procured or stocked because the failure rate is normally below that of the applicable end item or component. The failure of such part or assembly should result in retirement of the end item from the supply system.
X1	Repair Parts which are not procured or stocked. The requirement for such items will be filled by the next higher assembly or component.
X2	Repair Parts which are not stocked and have no foreseen mortality. The indicated maintenance category requiring such repair parts will at-

Code	Explanation
	tempt to obtain the parts through cannibalization or salvage, the item may be requisitioned with exception data, from the end item manager, for immediate use.
G	Major assemblies that are procured with PEMA funds for initial issue only as exchange assemblies at DSU and GSU level. These assemblies will not be stocked above the DS and GS level or returned to depot supply level.

(2) Maintenance code indicates the lowest category of maintenance authorized to install the listed item. Repair parts and special tools assigned maintenance code "C" may be stocked at the operator level of maintenance when authorized by the Unit Commander. The maintenance level codes are:

Code	Explanation
C	Crew or operator maintenance
O	Organizational maintenance
F	Direct support maintenance
H	General support maintenance
D	Depot maintenance

(3) Recoverability code indicates whether unserviceable items should be returned for recovery or salvage. Items not coded are expendable. Recoverability codes are:

Code	Explanation
R	Applied to repair parts (assemblies or components) which are considered economically reparable at direct and general support maintenance levels. When the item is no longer economically reparable, it is normally disposed of at the GS level. When supply considerations dictate, some of these repair parts may be listed for automatic return to supply for depot level repair as set forth in AR 710–50. When so listed, they will be replaced by supply on an exchange basis.
S	Repair Parts and assemblies which are economically reparable at DSU and GSU activities and which normally are furnished by supply on an exchange basis. When items are determined by a GSU to be uneconomically reparable, they will be evacuated to a depot for evaluation and analysis before final disposition.
T	Higher dollar value recoverable repair parts which are subject to special handling and are issued on an exchange basis. Such items will be repaired or overhauled at depot maintenance activities only. No repair may be accomplished at lower levels.
U	Repair Parts specifically selected for salvage by reclamation units because of precious metal content, critical materials, high dollar value or reusable casings or castings.

b. Federal Stock Number. Indicates the Federal stock number assigned to the item and will be used for requisitioning purposes.

c. Description. Indicates the Federal item name and any additional description of the item required. Assembly components and subassemblies are indented under major assemblies part number or other reference number is lowed by the applicable five-digit Federal su code for manufacturers in parenthesis. Re parts quantities included in kits and sets shown in front of the repair part name. Mate required for manufacture or fabrication is ide fied.

d. Unit of Measure (U/M). A two-chara alphabetic abbreviation indicating the amo or quantity of the item, as used, upon which allowances are based, e.g., ft, ea, pr, etc.

e. Quantity Incorporated in Unit. Indicates quantity of the item used in the assembly gro A "V" appearing in this column in lieu o quantity indicates that a definite quantity c not be indicated (e.g., shims, spacers, etc.).

f. Fifteen-Day Organizational Maintena Allowance.

(1) The allowance columns are divided i four subcolumns. Indicated in each subcolu opposite the first appearance of each item is total quantity of the items authorized for number of equipments supported. Subsequ appearances of the same item will have the lett "REF" in the allowance column, indicating to allowance quantities will be shown with the fi appearance of the item. To locate the referen item, locate the FSN or reference number in index. The earliest figure and item number is referenced item. Items authorized for use as quired but not for initial stockage are identif with an asterisk in the allowance column.

(2) The quantitative allowances for orga izational level of maintenance represents o initial prescribed load for a 15-day period for t number of equipments supported. Units auth ized additional prescribed loads will multiply t number of prescribed loads authorized by t quantity of the repair parts reflected in the a propriate density column to obtain the to quantity of repair parts authorized.

(3) Organizational units providing maint nance for more than 100 of these equipmen shall determine the total quantity of parts r quired by: First, divide the number of equi ments supported by 100 by moving the decim two spaces left; second, multiply the result the quantity in the 51–100 density colum Example, authorized allowance for 51–100 equi ments is 40; for 150 equipments, multiply 40 1.50 or 60 parts required.

(4) Subsequent changes to allowances wi be limited as follows: No change in the range items is authorized. If additional items are co

sidered necessary, recommendations should be forwarded to U.S. Army Mobility Equipment Command for exception or revision to the allowance list. Revision to the range of items authorized will be made by the U.S. Army Mobility Equipment Command based on engineering experience, demand data, or TAERS information.

g. Thirty-Day DS/GS Maintenance Allowances.

NOTE

Allowances in GS column are for GS maintenance only.

(1) The allowance columns are divided into three subcolumns. Indicated in each subcolumn, opposite the first appearance of each item, is the total quantity of items authorized for the number of equipments supported. Subsequent appearances of the same item will have the letters "REF" in the applicable allowance column. To locate the referenced item, locate the FSN or reference number in the index. The earliest figure and item number is the referenced item. Items authorized for use as required but not for initial stockage are identified with an asterisk in the allowance column.

(2) The quantitiative allowance for DS/GS levels of maintenance will represent initial stockage for a 30-day period for the number of equipments supported.

(3) To determine allowances when supporting more than 100 of these equipments: First, divide the number of equipments supported by 100 by moving the decimal two places left, second, multiply the result by the quantity in the 51–100 density column. Example, authorized allowance for 51–100 equipments is 40; for 150 equipments multiply 40 by 1.50 or 50 parts required.

h. One-Year Allowance Per 100 Equipments/ Contingency Planning Purposes. This column indicates opposite the first appearance of each item the total quantity required for distribution and contingency planning purposes. Subsequent appearances of the same item will have the letters "REF" in this column. The range of items indicates total quantities of all authorized items required to provide for adequate support of 100 equipments for one year.

i. Depot Maintenance Allowance Per 100 Equipments. This column indicates opposite the first appearance of each item, the total quantity authorized for depot maintenance of 100 equipments. Subsequent appearances of the same item will have the letters "REF" in this column. Items authorized for use but not for initial stockage are identified with an asterisk in the allowance column.

j. Illustration. This column is divided as follows:

(1) *Figure number.* Indicates the figure number of the illustration on which the item is shown.

(2) *Item number.* Indicates the callout number used to reference the item on the illustration.

4. Special Information

a. Repair parts mortality has been based on the cooling tower, 6000 hours operation per year, and the trailer, 500 hours operation per year.

b. Parts which require manufacture or assembly of a category higher than that authorized for installation will indicate in the source column the higher category.

c. The following publications pertain to the cooling tower and its components:

LO 5–3655–215–12	Lubrication Order
TM 5–3655–215–15	Operator, Organizational, Direct and General Support, and Depot Maintenance Manual

d. The same illustrations are used to illustrate the repair parts and special tools listed in both organizational maintenance section and direct and general support and depot maintenance section.

5. How to Locate Repair Parts

a. When the Federal stock number or reference number is unknown:

(1) *First.* Using the table of contents, determine the assembly group within which the repair part belongs. This is necessary since illustrations are prepared for assembly groups, and listings are divided into the same groups.

(2) *Second.* Find the illustration covering the assembly group to which the repair part belongs.

(3) *Third.* Identify the repair part on the illustration and note the illustration figure and item number of the repair part.

(4) *Fourth.* Using the Repair Parts Listing, find the assembly group to which the repair part belongs and locate the illustration figure and item number noted on the illustration.

b. When the Federal stock number or reference number is known:

(1) *First.* Using the Index of Federal Stock Numbers and Reference Numbers find the pertinent Federal stock number or reference number. This index is in ascending FSN sequence

followed by a list of reference numbers in alphanumeric sequence, cross-referenced to the illustration figure number and item number.

(2) *Second.* Using the Repair Parts Listing, find the assembly group of the repair part and the illustration figure number and item number referenced in the Index of Federal Stock Numbers and Reference Numbers.

c. When the Federal stock number or reference number is known and the repair part is not illustrated:

(1) *First.* Using the Index of Federal Stock Numbers and Reference Numbers find the pertinent Federal stock number or reference number in the section titled "Items Not Illustrated" and note the group number. This section is in ascending FSN sequence followed by a list of reference numbers in alpha-numeric sequence cross-referenced to assembly group number.

(2) *Second.* Using the Table of Contents, locate the assembly group number and page number.

(3) *Third.* Using the applicable group number and page number, locate the pertinent stock number or reference number in the Repair Parts Listing. Items which are not illustrated are listed at the end of the assembly group to which they belong.

6. Federal Supply Code for Manufacturers

Code	*Manufacturer*
00624	Aeroquip Corp., Aircraft Division Jackson Plant
01364	Allied Radio Corp.
03743	Appleton Electric Co.
03993	Case Power and Equipment Co.
04257	York, Otto H. Co. Inc.
04579	Aurora Pump, A Unit of General Signal Corp.
06721	Power Controls, Division Midland-Ross Corp.
06853	Bendix-Westinghouse Automotive Air Brake Co.
08108	Lamp Industry
09386	Budd Co., The Automotive Division
09922	Burndy Corp.
13050	Potter Co.
14959	Crane Co.
15235	Crouse & Hinds Co.
16605	Ceilcote Co. Inc., The
19207	Army tank-Automotive Center
22508	Fisher Governor Co.
23705	Fruehauf Corp.
29337	Hoover Ball, Division of Hoover Ball and Bearing Co.
33438	Electric Controls Co.
33533	Brennan Chemical Co.
34081	Ruskin Mfg. Co.
35197	Lau Inc.
38151	Marathon Electric Mfg. Corp.
38508	Marsh Instrument Co., Div. of Colorado Mfg. Co.
51064	Robbins and Myers, Inc.
54713	Eaton Yale and Towne Inc., Shuler Axle Division
56308	Spray Engineering Co.
56697	Standard Forge and Axle Co. Inc.
60038	Timken Roller Bearing Co.
71951	Doray Lamp Co. Inc.
73124	Hawward Mfg. Co. Inc.
73331	Guide Lamp, Division of General Motors Corp.
73651	Curtis Development and Mfg. Co.
74410	Holland Hitch Co.
75375	Knight, Maurice A. Co.
76526	Moeller Instrument Co. Inc.
76873	Ohio Injector Co., The
78824	Chemetron Corp., Tube Turns Division
79136	Waldes Kohinoor Inc.
79221	Watlow Electric Mfg. Co.
79470	Weatherhead Co., The
79500	Westinghouse Electric Corp.
80205	National Aerospace Standards
80328	Dorsey Trailers Inc.
80996	Grimell Corp.
81348	Federal Specifications
81349	Military Specifications
82666	Stockham Valves and Fittings Inc.
83209	Glasco Electric Co.
90598	American Air Filter Co. Inc.
90914	Haman and Co., Inc.
92940	Doerr Electric Corp.
92967	Hutchens and Son Metal Products Inc.
94222	Southco Inc.
95879	Alemite Instrument, Division of Stewart-Warner Corp.
96906	Military Standards
98003	Nielson Hardware Corp.
98343	Berg Mfg. and Sales Co.

7. Recommendations for Maintenance Publication Improvements

Report of errors, omissions, and recommendations for improving this publication by the us is encouraged. Reports should be submitted DA Form 2028 (Recommended Changes to Pu lications) and forwarded direct to Commandi General, U.S. Army Mobility Equipment Co mand, ATTN: AMSME-MPP, 4300 Goodfell Boulevard, St. Louis, Mo. 63120.

SECTION II. PRESCRIBED LOAD ALLOWANCE

(1) FEDERAL STOCK NUMBER	(2) DESCRIPTION	USABLE ON CODE	15-DAY OPERATIONAL MAINTENANCE ALLOWANCE (a) 1-5	[illegible]	[illegible]	[illegible]
	GROUP 02 - COOLING TOWER ELECTRICAL SYSTEM					
6240-011-5273	LAMP, INCANDESCENT					
	SWITCH, ROTARY WT1S10TILA (79500)					
	LIGHT, INDICATING 0TTH3 (79500)					
	GROUP 03 - MAKE-UP WATER SYSTEM					
	PACKING, PREFORMED 20-2 (33533)					
	PACKING, VALVE 2469X1-1-4-7 (76873)		1	3	5	10
	ELEMENT, STRAINER 304SS020 (03933)					
	VALVE, DRAIN 6660 (79470)				1	2
	GROUP 04 - COOLING TOWER WATER SYSTEM					
3655-302-6149	ELEMENT, STRAINER					
5330-620-7122	GASKET, RUBBER					
	GAGE, PRESSURE TYPE1PCPSR6-60LB (38508)					
	VALVE, DRAIN 140 (79470)					
	PACKING, VALVE 2469X2-7 (76873)		2	9	18	38
	GAGE, TEMPERATURE 4750MS2-20T0240 (76526)					
	GROUP 05 - COOLING TOWER					
	NOZZLE, SPRAY 6XW (56308)			1	1	3
	GROUP 06 - TRAILER ASSEMBLY					
2540-860-0575	GUARD, SPLASH				1	1
2610-051-9450	INNER TUBE				1	1
2610-262-8653	TIRE, PNEUMATIC				1	1
3110-100-0335	BEARING CUP, INNER					1
3110-100-0670	BEARING CONE					1
3110-293-8997	BEARING CUP, OUTER					1
3110-293-8998	BEARING CONE					1
4730-595-0083	COUPLING, AUTOMOTIVE, AIR BRAKE					1
5925-803-4424	CIRCUIT BREAKER				1	1
6220-299-7425	LENS, AMBER					

SECTION II. PRESCRIBED LOAD ALLOWANCE

(1) FEDERAL STOCK NUMBER	(2) DESCRIPTION USABLE ON CODE	(3) 15-DAY ORGANIZATIO MAINTENANCE ALLOV (a) 1-5	(b) 6-20	(c) 21-50
6220-299-7426	LENS, RED			1
6220-337-6471	STOPLIGHT-TAILLIGHT BLACKOUT			
6220-577-3434	LIGHT, CLEARANCE			1
6220-577-3435	LIGHT, CLEARANCE			
6220-726-1916	LIGHT, CLEARANCE			1
6220-727-3288	LIGHT, CLEARANCE			
6220-729-9296	LENS, AMBER			
6220-752-5993	LENS, RED			
6240-019-0877	LAMP, INCANDESCENT	1	2	4
6240-710-2742	LAMP, INCANDESCENT			1
6240-877-3405	LAMP, INCANDESCENT			
9905-202-3639	REFLECTOR, AMBER		1	1
9905-205-2795	REFLECTOR, RED			1
	VALVE, DRAIN 121565-048 (98343)			
	LENS, RED 42012 (71951)			
	LIGHT, STOP AND TAIL 50186 (71951)			

(1) SMR CODE	(2) FEDERAL STOCK NUMBER	(3) DESCRIPTION REF NUMBER & MFR CODE	USABLE ON CODE	(4) UNIT OF MEAS	(5) QTY INC IN UNIT	(6) 15-DAY ORGANIZATIONAL MAINTENANCE ALW (a) 1-5	(b) 6-20	(c) 21-50	(d) 51-100	(7) ILLUSTRATION (a) FIG. NO.	(b) ITEM NO.
		SECTION III - REPAIR PARTS FOR ORGANIZATIONAL MAINTENANCE									
		GROUP 01 - ACCESSORIES									
X2	0	CABLE ASSEMBLY, POWER 10098-101 (90598)		EA	1					1	1
P	0	5975-878-3791 GROUNDING ROD ASSEMBLY, TYPE2, STYLE 2 MILR11461 (81349)		EA	1	*	*	*	*	1	4
X2	0	TERMINAL SCREWLUG KPA4C (09922)		EA	8					1	5
P	0	5310-950-0039 NUT, SELF-LOCKING, HEXAGON: storage box mtg, 3/8-24 thd size MS21044N6 (96906)		EA	4	*	*	*	*	2	1
P	0	5310-080-6004 WASHER, FLAT: storage box mtg, 3/8 in. screw size MS27183-14 (96906)		EA	8	*	*	*	*	2	2
P	0	5305-269-2803 SCREW, CAP, HEXAGON HEAD: storage box mtg, 3/8-24 thd size, 1 in. lg MS90726-60 (96906)		EA	4	*	*	*	*	2	3
X2	0	BOX, STORAGE 10091-101 (90598)		EA	1					2	-
P	0	5310-877-5797 NUT, SELF-LOCKING, HEXAGON: latch mtg, No. 10-32 thd size MS21044N3 (96906)		EA	4	*	*	*	*	2	4
P	0	5310-809-8546 WASHER, FLAT: latch mtg, No. 10 screw size MS27183-8 (96906)		EA	4	*	*	*	*	2	5
P	0	5305-989-7435 SCREW, MACHINE: latch mtg, No. 10-32 thd size, 5/8 in. lg MS35207-264 (96906)		EA	4	*	*	*	*	2	6
X2	0	LATCH, PULL HC206CE (98003)		EA	2					2	7
P	0	5310-877-5796 NUT, SELF-LOCKING, HEXAGON: cover mtg, 1/4-28 thd size MS21044N4 (96906)		EA	11	*	*	*	*	2	8
P	0	5310-809-4058 WASHER, FLAT: cover mtg, 1/4 in. screw size MS27183-10 (96906)		EA	22	*	*	*	*	2	9
P	0	5305-068-0505 SCREW, CAP, HEXAGON HEAD: cover mtg, 1/4-28 thd size, 5/8 in. lg MS90726-5 (96906)		EA	11	*	*	*	*	2	10
X2	0	COVER, BOX 10091-2 (90598)		EA	1					2	11
X2	0	BOX STORAGE 10091-1 (90598)		EA	1					2	12
		GROUP 02 - COOLING TOWER ELECTRICAL SYSTEM									
P	0	5305-071-2242 SCREW, CAP, HEXAGON HEAD: conduit clamp mtg, 1/4-20 thd size, 1 1/8 in. lg MS90725-9 (96906)		EA	10	*	*	*	*	3	1
P	0	5310-582-5965 WASHER, LOCK: conduit clamp mtg, 1/4 in. screw size MS35338-44 (96906)		EA	10	*	*	*	*	3	2
P	0	5310-809-4058 WASHER, FLAT: conduit clamp mtg, 1/4 in. screw size MS27183-10 (96906)		EA	8	*	*	*	*	3	3
X2	0	STRAP, CONDUIT: circulating pump, 3/4 in. CL75M (03743)		EA	2					3	4
X2	0	CLAMP BACK, CONDUIT: circulating pump, 3/4 in. CLB75M (03743)		EA	2					3	5
X2	0	STRAP, CONDUIT: immersion heater and fan motor, 1in. CL100M (03743)		EA	4					3	6
X2	0	CLAMP BACK, CONDUIT: immersion heater and fan, 1in. CLB100M (03743)		EA	4					3	7

(1) SMR CODE	(2) FEDERAL STOCK NUMBER	(3) DESCRIPTION REF NUMBER & MFR CODE	USABLE ON CODE	(4) UNIT OF MEAS	(5) QTY INC IN UNIT	(6) 15-DAY ORGANIZATIONAL MAINTENANCE ALW (a) 1-5	(b) 6-20	(c) 21-50	(d) 51-100	T (a) FIG NO	S-ON (b) TEM NO.
X2 0		CLAMP, CONDUIT: blower fan, 1 1/4 in. CL125M (03743)		EA	4					3	8
X2 0		CLAMP BACK, CONDUIT: blower fan, 1 1/4 in. CLB125M (03743)		EA	4					3	9
P 0	5310-877-5797	NUT, SELF-LOCKING, HEXAGON: extinguisher mtg, No. 10-32 thd size MS21044N3 (96906)		EA	2	*	*	*	*	4	1
P 0	5305-993-1851	SCREW, MACHINE: extinguisher mtg, No. 10-32 thd size, 1 in. lg MS35207-267 (96906)		EA	2	*	*	*	*	4	2
P 0		LIGHT, INDICATING: control panel OTTH3 (79500)		EA	6	*	*	1	2	4	3
P 0	6240-011-5273	LAMP, INCANDESCENT 51 (08108)		EA	6	*	1	1	3	4	4
X2 0		PLATE, INFORMATION: switch, fan 1 204P019H11FAN1 (79500)		EA	1					4	5
X2 0		PLATE, INFORMATION: switch, fan 2 204P019H11FAN2 (79500)		EA	1					4	6
X2 0		PLATE, INFORMATION: switch, fan 3 204P019H11FAN3 (79500)		EA	1					4	7
X2 0		PLATE, INFORMATION: switch, fan 4 204P019H11FAN4 (79500)		EA	1					4	8
X2 0		PLATE, INFORMATION: switch, water pump 204P019H11WATERPUMP (79500)		EA	1					4	9
X2 0		PLATE, INFORMATION: switch, water heater 204P019H11WATERHEATER (79500)		EA	1					4	0
P 0		SWITCH, ROTARY: stop-start selector WT1S10T1LA (79500)		EA	6	*	*	1	2	4	1
P 0	5305-990-6444	SCREW, MACHINE: interference suppression capacitor mtg, No. 10-32 thd size, 3/8 in. lg MS35207-261 (96906)		EA	8	*	*	*	*	5	4
P 0	5310-809-8546	WASHER, LOCK: interference suppression capacitor mtg, No. 10 screw size MS27183-8 (96906)		EA	8	*	*	*	*	5	5
X2 0		FILTER, RFI 5003-4336 (13050)		EA	1					5	6
		GROUP 03 - MAKE-UP WATER SYSTEM									
P 0	5310-950-0039	NUT, SELF-LOCKING, HEXAGON: U bolt, 3/8-24 thd size MS21044N6 (96906)		EA	8	*	*	*	*	6	1
P 0	5310-637-9541	WASHER, LOCK: water line U bolt, 3/8 in. screw size MS35338-46 (96906)		EA	8	*	*	*	*	6	2
P 0	5310-080-6004	WASHER, FLAT: U bolt, 3/8 in. screw size MS27183-14 (96906)		EA	8	*	*	*	*	6	3
X2 0		BOLT, U: water line support, 3/8-24 thd size 10092-1 (90598)		EA	4					6	4
X2 0		CAP, PIPE: water pipe, 1 1/4 in. NPT FIG675-1-1-4 (82666)		EA	1					6	3
P 0		ELEMENT, STRAINER 304SS020 (03933)		EA	1	*	*	1	1	8	2
P 0		PACKING, VALVE 2469X1-1-4-7 (76873)		EA	2	1	3	5	10	9	1

(1) SMR CODE	(2) FEDERAL STOCK NUMBER	(3) DESCRIPTION REF NUMBER & MFR CODE	USABLE ON CODE	(4) UNIT OF MEAS	(5) QTY INC IN UNIT	(6) 15-DAY ORGANIZATIONAL MAINTENANCE ALW (a) 1-5	(b) 6-20	(c) 21-50	(d) 51-100	(7) ILLUSTRATION (a) FIG. NO.	(b) ITEM NO.
P O	5310-080-6004	WASHER, FLAT: treatment tank mtg, 3/8 in. screw size MS27183-14 (96906)		EA	8	*	*	*	*	10	2
P O	5305-269-2803	SCREW, CAP, HEXAGON HEAD: treatment tank mtg, 3/8-24 thd size, 1 in. lg MS90726-60 (96906)		EA	4	*	*	*	*	10	3
P O		VALVE, DRAIN: treatment tank 6660 (79470)		EA	1	*	*	1	2	10	4
X2 O		TANK ASSEMBLY, WATER TREATMENT 10095-3-101 (90598)		EA	1					10	5
X2 O		LID, WATER TANK 20-1 (33533)		EA	1					10	6
P O		PACKING, PREFORMED 20-2 (33533)		EA	1	*	*	*	1	10	7
X2 O		STRAINER, TOP 20-3 (33533)		EA	1					10	8
X2 O		STRAINER, BOTTOM 20-4 (33533)		EA	1					10	9
		GROUP 04 - COOLING TOWER WATER SYSTEM									
X2 O		CAP, PIPE: water outlet line, 4 in. NPT FIG1124-4 (80996)		EA	1					11	1
P O		GAGE, TEMPERATURE 4750MS2-20T0240 (76526)		EA	1	*	*	*	1	11	2
P O	5310-877-5796	NUT, SELF-LOCKING, HEXAGON: gage bracket mtg, 1/4-28 thd size MS21044N4 (96906)		EA	2	*	*	*	*	11	3
P O	5310-809-4058	WASHER, FLAT: gage bracket mtg, 1/4 in. screw size MS27183-10 (96906)		EA	4	*	*	*	*	11	4
P O	5305-068-0505	SCREW, CAP, HEXAGON HEAD: gage bracket mtg, 1/4-28 thd size, 5/8 in. lg MS90726-5 (96906)		EA	2	*	*	*	*	11	5
		BRACKET: gage mtg 10087 (90598)		EA	1					11	6
P O		GAGE, PRESSURE: 1-4NPT bottom connection, male TYPE1PCPSR6-60LB (38508)		EA	1	*	*	*	1	11	7
P O		VALVE, DRAIN: strainer 6660 (79470)		EA	2	REF	REF	REF	REF	12	1
X2 O		BUSHING, PIPE: strainer valve, 1/4 X 3/8 in. NPT FIG383-3-8X1-4 (80996)		EA	2					12	2
X2 O		ELBOW, PIPE: strainer valve, 3/8 in. NPT, street FIG1103-3-8 (80996)		EA	2					12	3
P O	5330-620-7122	GASKET, RUBBER: strainer element cover 50-13-4IN (73124)		EA	2	*	*	*	1	12	8
P O	3655-302-6149	ELEMENT 50-8-4IN (73124)		EA	2	*	*	*	1	12	10
X2 O		PLUG, PIPE: body drain, 1 1/4 in. NPT 50-18-4IN (73124)		EA	3					12	30

(1) SMR CODE	(2) FEDERAL STOCK NUMBER	(3) DESCRIPTION REF NUMBER & MFR CODE	USABLE ON CODE	(4) UNIT OF MEAS	(5) QTY INC IN UNIT	(6) 15-DAY ORGANIZATIONAL MAINTENANCE ALW (a) 1-5	(b) 6-20	(c) 21-50	(d) 51-100	T (a) FIG NO	IS-ION (b) TEM NO.
P 0	5310-950-0039	NUT, SELF-LOCKING, HEXAGON: u bolt mtg, 3/8-24 thd size MS21044N6 (96906)		EA	4	*	*	*	*	13	1
P 0	5310-080-6004	WASHER, FLAT: U bolt mtg, 3/8 in. screw size MS27183-14 (96906)		EA	4	*	*	*	*	13	2
X2 0		BOLT, U: pump suction line 10092-2 (90598)		EA	2					13	3
P 0		VALVE, DRAIN: foot valve 140 (79470)		EA	1	*	*	*	*	13	12
P 0	5310-950-0039	NUT, PLAIN, HEXAGON: U bolt mtg, 3/8-24 thd size MS21044N6 (96906)		EA	2	*	*	*	*	18	1
P 0	5310-637-9541	WASHER, LOCK: U bolt mtg, 3/8 in. screw size MS35338-46 (96906)		EA	2	*	*	*	*	18	2
P 0	5310-080-6004	WASHER, FLAT: U bolt mtg, 3/8 in. screw size MS27183-14 (96906)		EA	2	*	*	*	*	18	3
X2 0		U BOLT: inlet water line support 10092-2 (90598)		EA	1					18	4
P 0		GAGE, TEMPERATURE: water inlet line 4750MS2-20T0240 (76526)		EA	1	REF	REF	REF	REF	18	5
P 0	5305-068-0506	SCREW, CAP, HEXAGON HEAD: gage bracket mtg, 1/4-20 thd size, 3/4 in. lg MS90726-6 (96906)		EA	2	*	*	*	*	18	6
P 0	5310-582-5965	WASHER, LOCK: gage bracket mtg, 1/4 in. screw size MS35338-44 (96906)		EA	2	*	*	*	*	18	7
P 0	5310-809-4058	WASHER, FLAT: gage bracket mtg, 1/4 in. screw size MS27183-10 (96906)		EA	2	*	*	*	*	18	8
X2 0		BRACKET: gage mtg 10081 (90598)		EA	1					18	9
P 0		GAGE, PRESSURE: 1-4 NPT bottom conn male TYPE1PCPSR6-60LB (38508)		EA	1	REF	REF	REF	REF	18	10
X2 0		CAP, PIPE: water inlet pipe FIG1124-4 (80996)		EA	1					18	12
P 0		PACKING, VALVE 2469X2-7 (76873)		EA	8	2	9	18	38	19	9
		GROUP 05 - COOLING TOWER									
P 0	5310-732-0558	NUT, PLAIN, HEXAGON: blower cover mtg, 3/8-16 thd size MS51967-8 (96906)		EA	32	*	*	*	*	20	1
P 0	5310-637-9541	WASHER, LOCK: blower cover mtg. 3/8 in. screw size MS35338-46 (96906)		EA	32					20	2
P 0	5310-809-4061	WASHER, FLAT: blower cover mtg, 3/8 in. screw size MS27183-15 (96906)		EA	32	*	*	*	*	2	3
P 0	5305-269-3211	SCREW, CAP, HEXAGON HEAD: blower cover mtg, 3/8-16 thd size, 1 in. lg MS90725-60 (96906)		EA	32	*	*	*	*	20	4
X2 0		COVER, FAN 7078-5 (75375)		EA	4					2	5
X2 0		SCREEN: blower 43-00348-004 (51064)		EA	4					2	6

(1) SMR CODE	(2) FEDERAL STOCK NUMBER	(3) DESCRIPTION REF NUMBER & MFR CODE	USABLE ON CODE	(4) UNIT OF MEAS	(5) QTY INC IN UNIT	(6) 15-DAY ORGANIZATIONAL MAINTENANCE ALW (a) 1-5	(b) 6-20	(c) 21-50	(d) 51-100	(7) ILLUSTRATION (a) FIG. NO.	(b) ITEM NO.
P O	5310-761-6882	NUT, PLAIN, HEXAGON: cover plate mtg, 1/4-20 thd size MS51967-2 (96906)		EA	24	*	*	*	*	23	4
X2 O		PLATE, COVER: spray header access 7078-14 (75375)		EA	8					23	5
X2 O		HEADER ASSEMBLY, SPRAY 7078-9 (75375)		EA	8					24	1
P O		NOZZLE, SPRAY 6KW (56308)		EA	56	*	1	1	3	24	2
X2 O		PIPE, SPRAY 7118-1 (75375)		EA	8					24	3
P O	5310-761-6882	NUT, PLAIN, HEXAGON: sump cover mtg, 1/4-20 thd size MS51967-2 (96906)		EA	15	*	*	*	*	26	1
P O	5310-582-5965	WASHER, LOCK: sump cover mtg, 1/4 in. screw size MS35338-44 (96906)		EA	15	*	*	*	*	26	2
P O	5310-809-4058	WASHER, FLAT: sump cover mtg, 1/4 in. screw size MS27183-10 (96906)		EA	15	*	*	*	*	26	3
X2 O		COVER, SUMP 7078-8 (75375)		EA	1					26	4
		GROUP 06 - TRAILER ASSEMBLY									
P O	5305-855-0966	SCREW, TAPPING: reflector mtg, No. 8-32 thd size, 7/8 in. lg MS24629-39 (96906)		EA	4	*	*	*	*	27	1
P O	5310-877-5797	NUT, SELF-LOCKING HEXAGON: reflector mtg, No. 10-32 thd size MS21044N3 (96906)		EA	16	*	*	*	*	27	2
P O	5305-993-1851	SCREW, MACHINE: reflector mtg, No. 10-32 thd size, 1 in. lg MS35207-267 (96906)		EA	16	*	*	*	*	27	3
P O	9905-202-3639	REFLECTOR, AMBER MS35387-2 (96906)		EA	6	*	1	1	2	27	4
P O	9905-205-2795	REFLECTOR, RED MS35387-1 (96906)		EA	4	*	*	1	1	27	5
X2 O		BLOCK ASSEMBLY: wheel chock D35533 (80328)		EA	2					27	6
P O	2610-262-8653	TIRE, PNEUMATIC MS35388-21 (96906)		EA	8	*	*	1	1	27	7
P O	2610-051-9450	INNER TUBE MS35392-15 (96906)		EA	8	*	*	1	1	27	8
X2 O		WHEEL MS53044-6 (96906)		EA	8					27	9
X2 O		TIE DOWN RING NAS1251A25-16 (80205)		EA	10					27	10
P O	5310-984-3806	NUT, PLAIN, HEXAGON: splash guard mtg, 5/16-18 thd size MS51922-9 (96906)		EA	8	*	*	*	*	28	1
P O	5306-225-9081	BOLT, MACHINE: splash guard mtg, 5/16-18 thd size, 1 1/4 in. lg MS90725-36 (96906)		EA	8	*	*	*	*	28	2
X2 O		STRIP, BACKING: splash guard SU02-098 (80328)		EA	2					28	3
P O	2540-860-0575	GUARD, SPLASH MS51331-3 (96906)		EA	2	*	*	1	1	28	4

(1) SMR CODE	(2) FEDERAL STOCK NUMBER	(3) DESCRIPTION REF NUMBER & MFR CODE	USABLE ON CODE	(4) UNIT OF MEAS	(5) QTY INC IN UNIT	(6) 15-DAY ORGANIZATIONAL MAINTENANCE ALW (a) 1-5	(b) 6-20	(c) 21-50	(d) 51-100	(7) ILLUSTRATION (a) FIG. NO.	(b) ITEM NO.
P 0	5305-855-0966	SCREW, TAPPING: clearance light mtg, No. 8-32 thd size, 7/8 in. lg MS24629-39 (96906)		EA	84	*	*	*	*	29	1
P 0	6220-577-3435	LIGHT, CLEARANCE: blackout, amber MS35424-1 (96906)		EA	4	*	*	*	1	29	2
P 0	6240-019-0877	LAMP, INCANDESCENT MS15570-1251 (96906)		EA	4	1	2	4	8	29	3
P 0	6220-729-9296	LENS, AMBER MS35420-1 (96906)		EA	4	*	*	*	1	29	4
X2 0		LAMPHOLDER MS35422-1 (96906)		EA	4					29	5
P 0	6220-577-3434	LIGHT, CLEARANCE: amber MS35423-1 (96906)		EA	6	*	*	1	1	29	2
P 0	6240-019-0877	LAMP, INCANDESCENT MS15570-1251 (96906)		EA	6	REF	REF	REF	REF	29	3
P 0	6220-299-7425	LENS, AMBER MS35421-1 (96906)		EA	6	*	*	1	1	29	4
X2 0		LAMPHOLDER MS35422-1 (96906)		EA	6					29	5
P 0	6220-726-1916	LIGHT, CLEARANCE: red MS35423-2 (96906)		EA	7	*	*	1	1	29	2
P 0	6240-019-0877	LAMP, INCANDESCENT MS15570-1251 (96906)		EA	7	REF	REF	REF	REF	29	3
P 0	6220-299-7426	LENS, RED MS35421-2 (96906)		EA	7	*	*	1	1	29	4
X2 0		LAMPHOLDER MS35422-1 (96906)		EA	7					29	5
P 0	6220-727-3288	LIGHT, CLEARANCE: blackout, red MS35424-2 (96906)		EA	4	*	*	*	1	29	2
P 0	6240-019-0877	LAMP, INCANDESCENT MS15770-1251 (96906)		EA	4	REF	REF	REF	REF	29	3
P 0	6220-752-5993	LENS, RED MS35420-2 (96906)		EA	4	*	*	*	1	29	4
X2 0		LAMPHOLDER MS35422-1 (96906)		EA	4					29	5
P 0	5305-855-0966	SCREW, TAPPING: light mtg MS24629-39 (96906)		EA	6	*	*	*	*	30	1
P 0		LIGHT, STOP AND TAIL 50186 (71951)		EA	2	*	*	*	1	30	-
P 0		LENS, RED 42012 (71951)		EA	2	*	*	*	1	30	2
P 0	6240-877-3405	LAMP, INCANDESCENT 1662 (08108)		EA	2	*	*	*	1	30	3
X2 0		CONNECTOR, PLUG 46087 (71951)		EA	4					30	4
X2 0		WASHER, ASSEMBLY 43546 (71951)		EA	2					30	5
X2 0		GROMMET 48001 (71951)		EA	2					30	6
X2 0		WIRE, LIGHT: 12 gage 45002 (71951)		EA	4					30	7
X2 0		SCREW, SHEET METAL: light, No. 6 X 1/2 in. lg 44006 (71951)		EA	2					30	8

(1) SMR CODE	(2) FEDERAL STOCK NUMBER	(3) DESCRIPTION REF NUMBER & MFR CODE	USABLE ON CODE	(4) UNIT OF MEAS	(5) QTY INC IN UNIT	(6) 15-DAY ORGANIZATIONAL MAINTENANCE ALW (a) 1-5	(b) 6-20	(c) 21-50	(d) 51-100	(7) ILLUSTRATION (a) FIG. NO.	(b) ITEM NO.
X2 0		LAMPHOLDER 51023 (71951)		EA	2					30	9
X2 0		EYELET: screw hole, 7/32 in. dia 45751 (71951)		EA	6					30	10
X2 0		STRAP, GROUND 30736 (71951)		EA	2					30	11
X1		BODY 47202 (71951)		EA	2					30	12
P 0	5305-984-5688	SCREW, CAP, HEXAGON HEAD: light mtg MS35206-308 (96906)		EA	4	*	*	*	*	31	1
P 0	5310-999-7643	WASHER, LOCK: light mtg MS122034 (96906)		EA	4	*	*	*	*	31	2
P 0	6220-337-6471	STOPLIGHT-TAILLIGHT BLACKOUT MS51330-1 (96906)		EA	2	*	*	*	1	31	-
X2 0		SCREW, MACHINE: door mtg. 7320641 (19207)		EA	12					31	3
X2 0		RING, RETAINING: door screw 5936190 (73331)		EA	12					31	4
X2 0		DOOR ASSEMBLY, LIGHT 7526018 (73331)		EA	2					31	5
X2 0		GASKET: door mtg 7320658 (73331)		EA	2					31	6
P 0	6240-710-2742	LAMP, INCANDESCENT: light MS15570 (96906)		EA	4	*	*	1	2	31	7
X1		BODY 7525997 (73331)		EA	2					31	8
P 0	5310-088-1251	NUT, PLAIN, HEXAGON: receptacle mtg, 1/4-20 thd size MS51922-1 (96906)		EA	8	*	*	*	*	32	1
P 0	5305-988-1727	SCREW, MACHINE: receptacle mtg, 1/4-20 thd size, 1 in. lg MS35206-283 (96906)		EA	8	*	*	*	*	32	2
X2 0		COVER, CONNECTOR 298618 (23705)		EA	2					32	3
X2 0		CONNECTOR RECEPTACLE, PIN: front MS75021-1 (96906)		EA	1					32	4
X2 0		CONNECTOR, RECEPTACLE: rear MS75021-2 (96906)		EA	1					32	4
P 0	5305-984-6211	SCREW, MACHINE: junction box cover mtg, No. 10-24 thd size, 5/8 in. lg MS35206-264 (96906)		EA	4	*	*	*	*	33	1
X2 0		COVER, JUNCTION BOX BO-97-272 (80328)		EA	1					33	2
P 0	5310-965-1763	NUT, PLAIN, HEXAGON: terminal board and circuit breaker mtg, No. 10-32 thd size MS20341-10S (96906)		EA	8	*	*	*	*	33	3
P 0	5305-993-1851	SCREW, MACHINE: terminal board mtg, No. 10-32 thd size, 1 in. lg MS35207-267 (96906)		EA	2	*	*	*	*	33	4
P 0	5305-059-3664	SCREW, MACHINE: circuit breaker mtg, No. 10-32 thd size, 1 1/4 in. lg MS51958-68 (96906)		EA	6	*	*	*	*	33	5
X2 0		TERMINAL BOARD 47A1838 (01364)		EA	1					33	6
P 0	5925-803-4424	CIRCUIT BREAKER MS39062-2 (96906)		EA	3	*	*	*	1	33	7

(1) SMR CODE	(2) FEDERAL STOCK NUMBER	(3) DESCRIPTION REF NUMBER & MFR CODE	USABLE ON CODE	(4) UNIT OF MEAS	(5) QTY INC IN UNIT	(6) 15-DAY ORGANIZATIONAL MAINTENANCE ALW (a) 1-5	(b) 6-20	(c) 21-50	(d) 51-100	(7) ILLUSTRATION (a) FIG. NO.	(b) ITEM NO.
X2 0		GROMMET, RUBBER: junction box MS35489-42 (96906)		EA	2					33	8
X2 0		PINTLE HOOK 760-1 (74410)		EA	1					34	-
X2 0		PIN, COTTER: mounting nut, 1/4 in. dia, 3 in. lg 773 (74410)		EA	1					34	1
X2 0		NUT, CASTELLATED, HEXAGON: pintle mtg, 1 1/2-12 thd size 771 (74410)		EA	1					34	2
X2 0		SCREW, DRIVE: chain mtg 128 (74410)		EA	1					34	3
X2 0		PIN, COTTER: locking, 1/4 in. dia, 3 1/2 in. lg 770-1 (74410)		EA	1					34	4
X2 0		LINK, CHAIN 127 (74410)		EA	1					34	5
X2 0		CHAIN: locking, pin 196 (74410)		EA	1					34	6
X2 0		PIN, COTTER: nut retaining, 1/8 in. dia, 1 1/2 in. lg 119-1 (74410)		EA	1					34	7
X2 0		NUT, CASTELLATED, HEXAGON: pintle bolt, 1-14 thd size 120-2 (74410)		EA	1					34	8
X2 0		FITTING, LUBRICATION: bolt and latch pin 767 (74410)		EA	2					34	9
X2 0		BOLT, MACHINE: pintle 766 (74410)		EA	1					34	10
X1		PINTLE 761 (74410)		EA	1					34	11
X2 0		PIN, LATCH 765 (74410)		EA	1					34	12
X2 0		LATCH, PINTLE 762 (74410)		EA	1					34	13
X2 0		SPRING, HELICAL: latch 78 (74410)		EA	1					34	14
X2 0		LOCK 764 (74410)		EA	1					34	15
X2 0		PIN ASSEMBLY: towing RS91-440 (80328)		EA	2					34	16
X2 0		PIN ASSEMBLY: retaining RS91-444 (80328)		EA	2					34	17
P 0	4730-595-0083	COUPLING, AUTOMOTIVE, AIR BRAKE MS35746-1 (96906)		EA	4	*	*	*	1	35	1
P 0	4730-196-1504	NIPPLE, PIPE: coupling, 1/2 in. NPT WWN351TYPE1 (81348)		EA	2	*	*	*	*	35	2
X2 0		VALVE, GATE 217799 (06853)		EA	2					35	3
X2 0		NIPPLE ASSEMBLY 10311 (98343)		EA	4					35	4
X2 0		CONNECTOR, HOSE 215540 (06853)		EA	32					35	5
X2 0		HOSE, AIR BRAKE 2550-6 (00624)		FT	115					35	6
X2 0		NIPPLE, PIPE: brake hose, 1/4 in. NPT MS51953-25 (96906)		EA	21					35	7
X2 0		TEE, PIPE: brake hose, 1/4 in. NPT FIG1164X1-4 (80996)		EA	7					35	8
X2 0		GROMMET MS35489-123 (96906)		EA	50					35	9

(1) SMR CODE	(2) FEDERAL STOCK NUMBER	(3) DESCRIPTION REF NUMBER & MFR CODE	USABLE ON CODE	(4) UNIT OF MEAS	(5) QTY INC IN UNIT	(6) 15-DAY ORGANIZATIONAL MAINTENANCE ALW (a) 1-5	(b) 6-20	(c) 21-50	(d) 51-100	(7) ILLUSTRATION (a) FIG. NO.	(b) ITEM NO.
X2 0		PLUG, PIPE: air tank, 3/4 in. NPT 204514 (06853)		EA	2					35	10
P 0	5310-982-4908	NUT, PLAIN, HEXAGON: air tank mtg, 3/8-24 thd size MS21045-6 (96906)		EA	12	*	*	*	*	35	11
P 0	5310-080-6004	WASHER, FLAT: air tank mtg, 3/8 in. screw size MS27183-14 (96906)		EA	12	*	*	*	*	35	12
P 0	5305-269-2808	SCREW, CAP, HEXAGON HEAD: air tank mtg, 3/8-24 thd size, 1 3/4 in. lg MS90726-65 (96906)		EA	12	*	*	*	*	35	13
X2 0		GROMMET, RUBBER: tank mtg MS35489-11 (96906)		EA	24					35	14
X2 0		TANK, AIR: brake N3198AA (06721)		EA	3					36	1
P 0		VALVE, DRAIN 121565-048 (98343)		EA	3	*	*	*	1	36	2
P2 0S		VALVE, RELAY MS53004-1 (96906)		EA	1	*	*	*	*	36	3
X2 0		CLIP, CONNECTOR HOLDER 8742391 (19207)		EA	1					38	1
X2 0		CLIP, CONNECTOR HOLDER 10900665 (19207)		EA	14					38	2
X2 0		WIRING HARNESS D35527 (80328)		EA	1					38	-
X2 0		CONNECTOR, PLUG, SOCKET MS27144-1 (96906)		EA	35					38	3
X2 0		TERMINAL, LUG 7056700 (19207)		EA	6					38	4
X2 0		WIRE, ELECTRICAL M13486-1-5 (81348)		FT	250					38	5
X2 0		HUB AND DRUM ASSEMBLY: wheel 3991207 (56697)		EA	4					39	-
X2 0		NUT, LUG: right hand, 1 1/8-16 thd size 37891 (09386)		EA	20					39	1
X2 0		NUT, LUG: left hand, 1 1/8-16 thd size 37892 (09386)		EA	20					39	1
X2 0		CAP NUT: right hand 10708 (09386)		EA	20					39	2
X2 0		CAP NUT: left hand 10709 (09386)		EA	20					39	2
X2 0		BOLT, HUB CAP: 5/16-18 thd size, 1/2 in. lg 400128 (56697)		EA	24					39	3
X2 0		WASHER, LOCK: hub cap, 5/16 in. screw size 403115 (56697)		EA	24					39	4
X2 0		CAP, HUB 304104 (56697)		EA	4					39	5
P 0	3110-293-8997	BEARING CUP, OUTER HM212011 (60038)		EA	4	*	*	*	1	39	6
P 0	3110-100-0335	BEARING CUP, INNER 653 (60038)		EA	4	*	*	*	1	39	7
X2 0		FITTING, LUBRICATION: spider 1613B (95879)		EA	4					40	27
X2 0		NUT, SPINDLE 103102-001 (56697)		EA	4					41	3
X2 0		WASHER, LOCK 105107 (56697)		EA	4					41	4

(1) SMR CODE	(2) FEDERAL STOCK NUMBER	(3) DESCRIPTION REF NUMBER & MFR CODE	USABLE ON CODE	(4) UNIT OF MEAS	(5) QTY INC IN UNIT	(6) 15-DAY ORGANIZATIONAL MAINTENANCE ALW (a) 1-5	(b) 6-20	(c) 21-50	(d) 51-100	(7) ILLUSTRATION (a) FIG. NO.	(b) ITEM NO.
X2 0		NUT, SPINDLE 103103-002 (56697)		EA	4					41	5
P 0	3110-293-8998	BEARING CONE HM212049 (60038)		EA	4	*	*	*	1	41	6
P 0	3110-100-0670	BEARING CONE 663 (60038)		EA	4	*	*	*	1	41	7
X2 0		RETAINER, GREASE 106999-019 (56697)		EA	4					41	8
P 0	5310-880-7744	NUT, PLAIN, HEXAGON: crank clamp, 5/16-18 thd size MS51967-5 (96906)		EA	1	*	*	*	*	43	1
P 0	5310-407-9566	WASHER, LOCK: crank clamp, 5/16 in. screw size MS35338-45 (96906)		EA	1	*	*	*	*	43	2
P 0	5306-225-8499	BOLT, MACHINE: crank clamp, 5/16-18 thd size, 1 in. lg MS90725-34 (96906)		EA	1	*	*	*	*	43	3
X2 0		CLAMP, CRANK LG06-141 (80328)		EA	1					43	4
X2 0		CRANK, JACK SET 4343 (90914)		EA	1					43	5
P 0	5310-877-5795	NUT, PLAIN, HEXAGON: crank clip mtg, No. 10-32 thd size MS21044N8 (96906)		EA	4	*	*	*	*	43	6
P 0	5305-059-3660	SCREW, MACHINE: crank clip mtg, No. 10-32 thd size, 5/8 in. lg MS51958-64 (96906)		EA	4	*	*	*	*	43	7
X2 0		CLIP, CRANK STORAGE B3630 (80328)		EA	2					43	8
X2 0		SCREW, MACHINE: cover mtg 08-203234 (90914)		EA	8					43	19
X2 0		COVER, LEG 29-003946 (90914)		EA	2					43	20
X2 0		FITTING, LUBRICATION 08-202235 (90914)		EA	2					43	38
X2 0		NUT, PLAIN, HEXAGON: axle collar mtg, 3/8-24 thd size 08-203587 (90914)		EA	2					43	45
P 0	5305-269-2800	SCREW, CAP, HEXAGON HEAD: axle collar mtg, 3/8-24 thd size, 5/8 in. lg MS90726-57 (96906)		EA	2	*	*	*	*	43	46
X2 0		COLLAR, AXLE 29-003711 (90914)		EA	2					43	47
X2 0		AXLE, SHOE 29-059861 (90914)		EA	2					43	48
X2 0		SHOE, BASE E29-005977 (90914)		EA	2					43	49

(1) SMR CODE	(2) FEDERAL STOCK NUMBER	(3) DESCRIPTION REF NUMBER & MFR CODE / USABLE ON CODE	(4) UNIT OF MEAS	(5) QTY INC IN UNIT	(6) 30-DAY DS MAINT ALLOWANCE (a) 1-20	(b) 21-50	(c) 51-100	(7) 30-DAY GS MAINT ALLOWANCE (a) 1-20	(b) 21-50	(c) 51-100	(8) 1-YR ALW PER 100 EQUIP CNTGY	(9) DEPOT MAINT ALW PER 100 EQUIP	(10) ILLUSTRATION (a) FIG. NO.	(b) ITEM NO.
		SECTION V - REPAIR PARTS FOR DS, GS, AND DEPOT MAINTENANCE												
		GROUP 01 - ACCESSORIES												
X2 0		CABLE ASSEMBLY, POWER 10098-101 (90598)	EA	1									1	1
P2 F	5935-549-2115	CONNECTOR, PLUG, ELECTRICAL AP20467 (15235)	EA	1	*	*	*	*	*	*	5	*	1	2
X2 F		CABLE, ELECTRICAL CO-03HLF3-0-3-6R1650 (81349)	EA	1									1	3
P2 0	5975-878-3791	GROUNDING ROD ASSEMBLY, TYPE 2, STYLE 2 MILR11461 (81349)	EA	1	*	*	*	*	*	*	3	*	1	4
X2 0		TERMINAL, SCREWLUG KPA4C (09922)	EA	8									1	5
X2 F		WIRE, COPPER, STRANDED, SOFT: ground N06BARE (83209)	FT	40									1	6
P 0	5310-950-0039	NUT, SELF-LOCKING, HEXAGON: storage box mtg, 3/8-24 thd size MS21044N6 (96906)	EA	4	*	*	*	*	*	*	*	*	2	1
P 0	5310-080-6004	WASHER, FLAT: storage box mtg, 3/8 in. screw size MS27183-14 (96906)	EA	8	*	*	*	*	*	*	*	*	2	2
P 0	5305-269-2803	SCREW, CAP, HEXAGON HEAD: storage box mtg, 3/8-24 thd size, 1 in. lg MS90726-60 (96906)	EA	4	*	*	*	*	*	*	*	*	2	3
X2 0		BOX, STORAGE 10091-101 (90598)	EA	1									2	-
P 0	5310-877-5797	NUT, SELF-LOCKING, HEXAGON: latch mtg, No. 10-32 thd size MS21044N3 (96906)	EA	4	*	*	*	*	*	*	*	*	2	4
P 0	5305-989-7435	WASHER, FLAT: latch mtg, No. 10 screw size MS27183-8 (96906)	EA	4	*	*	*	*	*	*	*	*	2	5
P 0		SCREW, MACHINE: latch mtg, No. 10-32 thd size, 5/8 in. lg MS35207-264 (96906)	EA	4	*	*	*	*	*	*	*	*	2	6
X2 0		LATCH, PULL HC206CE (98003)	EA	2									2	7
P 0	5310-877-5796	NUT, SELF-LOCKING, HEXAGON: cover mtg, 1/4-28 thd size MS21044N4 (96906)	EA	11	*	*	*	*	*	*	*	*	2	8
P 0	5310-809-4058	WASHER, FLAT: cover mtg, 1/4 in. screw size MS27183-10 (96906)	EA	22	*	*	*	*	*	*	*	*	2	9
P 0	5305-068-0505	SCREW, CAP, HEXAGON HEAD: cover mtg, 1/4-28 thd size, 5/8 in. lg MS90726-5 (96906)	EA	11	*	*	*	*	*	*	*	*	2	10
X2 0		COVER, BOX 10091-2 (90598)	EA	1									2	11
X2 0		BOX, STORAGE 10091-1 (90598)	EA	1									2	12
		GROUP 02 - COOLING TOWER ELECTRICAL SYSTEM												
P 0	5305-071-2242	SCREW, CAP, HEXAGON HEAD: conduit clamp mtg, 1/4-20 thd size, 1 1/8 in. lg MS90725-9 (96906)	EA	10	*	*	*	*	*	*	*	*	3	1

(1) SMR CODE	(2) FEDERAL STOCK NUMBER	(3) DESCRIPTION REF NUMBER & MFR CODE	USABLE ON CODE	(4) UNIT OF MEAS	(5) QTY INC IN UNIT	(6) 30-DAY DS MAINT ALLOWANCE (a) 1-20	(b) 21-50	(c) 51-100	(7) 30-DAY GS MAINT ALLOWANCE (a) 1-20	(b) 21-50	(c) 51-100	(8) 1-YR ALW PER 100 EQUIP CNTGY	(9) DEPOT MAINT ALW PER 100 EQUIP	(10) ILLUSTRATION (a) FIG. NO.	(b) ITEM NO.
P O	5310-582-5965	WASHER, LOCK: conduit clamp mtg, 1/4 in. screw size MS35338-44 (96906)		EA	10	*	*	*	*	*	*	*	*	3	2
P O	5310-809-4058	WASHER, FLAT: conduit clamp mtg, 1/4 in. screw size MS27183-10 (96906)		EA	8	*	*	*	*	*	*	*	*	3	3
X2 O		STRAP, CONDUIT: circulating pump, 3/4 in. CL75M (03743)		EA	2									3	4
X2 O		CLAMP BACK, CONDUIT: circulating pump, 3/4 in. CLB75M (03743)		EA	2									3	5
X2 O		STRAP, CONDUIT: immersion heater and fan motor, 1 in. CL100M (03743)		EA	4									3	6
X2 O		CLAMP BACK, CONDUIT: immersion heater and fan, 1 in. CLB100M (03743)		EA	4									3	7
X2 O		CLAMP, CONDUIT: blower fan, 1 1/4 in. CL125M (03743)		EA	4									3	8
X2 O		CLAMP BACK, CONDUIT: blower fan, 1 1/4 in. CLB125M (03743)		EA	4									3	9
X2 F		COVER, CONDULET: tee 380 (15235)		EA	1									3	10
X2 F		GASKET, RUBBER: condulet tee GASK853N (15235)		EA	1									3	11
X2 F		COVER, CONDULET: cross 480 (15235)		EA	1									3	12
X2 F		GASKET, RUBBER: condulet cross GASK854N (15235)		EA	1									3	13
X2 F		WIRE, SINGLE CONDUCTOR: pump motor TYPETWCLASS2KINDC10AWG600V (81348)		FT	15									3	14
X2 F		WIRE, SINGLE CONDUCTOR: immersion heater to control box TYPETWCLASS2KINDC6AWG600V (81348)		FT	25									3	15
X2 F		WIRE, SINGLE CONDUCTOR: blower motors to control box TYPETWCLASS2KINDC14AWG600V (81348)		FT	180									3	16
X2 F		CONNECTOR, FIEXIBLE FITTING, ELECTRICAL: heater conduit STB100 (03743)		EA	2									3	17
X2 F		CONDUIT, FLEXIBLE: immersion heater 10096-17 (90598)		FT	6									3	18
P F	5305-051-0827	SCREW, CAP, HEXAGON HEAD: immersion heater mtg, 5/8-11 thd size, 2 in. lg MS90725-164 (96906)		EA	4	*	*	*	*	*	*	1	4	3	19
P F	5310-045-5001	WASHER, LOCK: immersion heater mtg, 5/8 in. screw size MS35340-50 (96906)		EA	4	*	*	*	*	*	*	*	*	3	20
P2 F S	4540-482 2442	HEATER, IMMERSION SK1114 (79221)		EA	1	*	*	*	*	*	*	5	*	3	21
X2 F		HUB, CONDUIT: heater conduit to control box HUB100 (03743)		EA	1									3	22
X2 F		ELBOW, CONDUIT: heater FFL100 (03743)		EA	1									3	23
X2 F		CONDUIT, RIGID: heater elbow to control box 10096-18 (90598)		FT	6									3	24

(1) SMR CODE	(2) FEDERAL STOCK NUMBER	(3) DESCRIPTION REF NUMBER & MFR CODE / USABLE ON CODE	(4) UNIT OF MEAS	(5) QTY INC IN UNIT	(6) 30-DAY DS MAINT ALLOWANCE (a) 1-20	(b) 21-50	(c) 51-100	(7) 30-DAY GS MAINT ALLOWANCE (a) 1-20	(b) 21-50	(c) 51-100	(8) 1-YR ALW PER 100 EQUIP CNTGY	(9) DEPOT MAINT ALW PER 100 EQUIP	(10) ILLUSTRATION (a) FIG. NO.	(b) ITEM NO.
X2 F		CONNECTOR, FLEX FITTING, ELECTRICAL: pump motor conduit STB9075 (03743)	EA	2									3	25
X2 F		GASKET, RUBBER: pump motor conduit connection STG75 (03743)	EA	2									3	26
X2 F		CONDUIT, FLEXIBLE: pump motor 10096-3 (90598)	FT	6									3	27
X2 F		CONNECTOR, FLEXIBLE FITTING, ELECTRICAL: blower conduit STB100 (03743)	EA	8									3	28
X2 F		GASKET, RUBBER: conduit connector STG100 (03743)	EA	8									3	29
X2 F		CONDUIT, FLEXIBLE: blower fan 10096-16 (90598)	FT	8									3	30
X2 F		HUB, CONDUIT: blower conduit to control box HUB125 (03743)	EA	1									3	31
X2 F		TEE, CONDULET: fan motor T38 (15235)	EA	1									3	32
X2 F		CONDUIT, RIGID: cross to tee 10096-18 (90598)	FT	3									3	33
X2 F		REDUCER, CONDUIT: condulet tee RE42 (15235)	EA	3									3	34
X2 F		CROSS, CONDULET: fan wiring X448 (15235)	EA	1									3	35
X2 F		CONDUIT, RIGID: cross to elbow 10096-9 (90598)	FT	6									3	36
X2 F		ELBOW, CONDUIT: blower FFL125 (03743)	EA	1									3	37
X2 F		CONDUIT, FLEXIBLE: elbow to control box 10096-3 (90598)	FT	5									3	38
P O	5310-877-5797	NUT, SELF-LOCKING, HEXAGON: extinguisher mtg, No. 10-32 thd size MS21044N3 (96906)	EA	2	*	*	*	*	*	*	*	*	4	1
P O	5305-993-1851	SCREW, MACHINE: extinguisher mtg, No. 10-32 thd size, 1 in. lg MS35207-267 (96906)	EA	2	*	*	*	*	*	*	*	*	4	2
X2 F R		PANEL, CONTROL: electrical 117-101 (33438)	EA	1									4	-
P O		LIGHT, INDICATING: control panel OTTH3 (79500)	EA	6	1	2	3	1	2	3	36	30	4	3
P O	6240-011-5273	LAMP, INCANDESCENT 51 (08108)	EA	6	1	3	5	1	3	5	60	54	4	4
X2 O		PLATE, INFORMATION: switch, fan 1 204P019H11FAN1 (79500)	EA	1									4	5
X2 O		PLATE, INFORMATION: switch, fan 2 204P019H11FAN2 (79500)	EA	1									4	6
X2 O		PLATE, INFORMATION: switch, fan 3 204P019H11FAN3 (79500)	EA	1									4	7
X2 O		PLATE, INFORMATION: switch, fan 4 204P019H11FAN4 (79500)	EA	1									4	8
X2 O		PLATE, INFORMATION: switch, water pump 204P019H11WATERPUMP (79500)	EA	1									4	9

(1) SMR CODE	(2) FEDERAL STOCK NUMBER	(3) DESCRIPTION REF NUMBER & MFR CODE	USABLE ON CODE	(4) UNIT OF MEAS	(5) QTY INC IN UNIT	(6) 30-DAY DS MAINT ALLOWANCE (a) 1-20	(b) 21-50	(c) 51-100	(7) 30-DAY GS MAINT ALLOWANCE (a) 1-20	(b) 21-50	(c) 51-100	(8) 1-YR ALW PER 100 EQUIP CNTGY	(9) DEPOT MAINT ALW PER 100 EQUIP	(10) ILLUSTRATION (a) FIG. NO.	(b) ITEM NO.
X2 0		PLATE, INFORMATION: switch, water heater 204P019H11WATERHEATER (79500)		EA	1									4	10
P 0		SWITCH, ROTARY: stop-start selector WT1S10T1LA (79500)		EA	6	1	2	3	1	2	3	36	30	4	11
X2 F		WASHER, RETAINING: door screw 17-10014-12 (94222)		EA	13									4	12
X2 F		SCREW, DOOR LOCKING: special 17-11-104-11 (94222)		EA	13									4	13
P F	5305-269-3213	SCREW, CAP, HEXAGON HEAD: receptacle mtg, 3/8-16 thd size, 1 1/4 in. lg MS90725-62 (96906)		EA	4	*	*	*	*	*	*	*	*	5	1
P F	5310-056-3395	NUT, PLAIN, HEXAGON: receptacle mtg, 3/8-16 thd size MS35649-2382 (96906)		EA	4	*	*	*	*	*	*	*	*	5	2
P2 F	5935-549-2111	CONNECTOR, RECEPTACLE AR2042 (15235)		EA	1	*	*	*	*	*	*	5	*	5	3
P 0	5305-990-6444	SCREW, MACHINE: interference suppression capacitor mtg, No. 10-32 thd size, 3/8 in. lg MS35207-261 (96906)		EA	8	*	*	*	*	*	*	*	*	5	4
P 0	5310-809-8546	WASHER, LOCK: interference suppression capacitor mtg, No. 10 screw size MS27183-8 (96906)		EA	8	*	*	*	*	*	*	*	*	5	5
X2 0		FILTER, RFI 5003-4336 (13050)		EA	1									5	6
P F	5305-989-7434	SCREW, MACHINE: circuit breaker bracket, No. 10-32 thd size, 1/2 in. lg MS35207-263 (96906)		EA	4	*	*	*	*	*	*	*	*	5	7
P F	5310-809-8546	WASHER, FLAT: circuit breaker bracket, No. 10 screw size MS27183-8 (96906)		EA	4	*	*	*	*	*	*	*	*	5	8
X2 F		BRACKET, CIRCUIT BREAKER: main 117-101-3 (33438)		EA	2									5	9
X2 F		CIRCUIT BREAKER: main JA3200 (79500)		EA	1									5	10
P F	5305-984-6193	SCREW, MACHINE: bracket mtg, No. 8-32 thd size, 1/2 in. lg MS35206-245 (96906)		EA	4	*	*	*	*	*	*	*	*	5	11
X2 F		BRACKET, CIRCUIT BREAKER 117-101-2 (33438)		EA	1									5	12
P2 FS	5925-433-1966	CIRCUIT BREAKER: water heater EHB3060 (79500)		EA	1	*	*	*	*	*	*	5	*	5	13
P2 FS		CIRCUIT BREAKER: water pump EHB3030 (79500)		EA	1	*	*	*	*	*	*	5	*	5	14
P' FS		CIRCUIT BREAKER: blower fan EHB3015 (79500)		EA	4	1	1	2	1	1	2	24	20	5	15
X2 F		BLOCK, TERMINAL 2PSWT16 (73631)		EA	3									5	16
X2 F		BLOCK, TERMINAL 2PSWT12 (73631)		EA	3									5	17
X2 F		BLOCK, TERMINAL 2PSWT8 (73631)		EA	5									5	18

(1) SMR CODE	(2) FEDERAL STOCK NUMBER	(3) DESCRIPTION REF NUMBER & MFR CODE	USABLE ON CODE	(4) UNIT OF MEAS	(5) QTY INC IN UNIT	(6) 30-DAY DS MAINT ALLOWANCE (a) 1-20	(b) 21-50	(c) 51-100	(7) 30-DAY GS MAINT ALLOWANCE (a) 1-20	(b) 21-50	(c) 51-100	(8) 1-YR ALW PER 100 EQUIP CNTGY	(9) DEPOT MAINT ALW PER 100 EQUIP	(10) ILLUSTRATION (a) FIG. NO.	(b) ITEM NO.
P F	5305-273-7352	SCREW, MACHINE: terminal block mtg, strip, No. 8-32 thd size,1/4 in. lg		EA	2	*	*	*	*	*	*	*	*	5	19
X2 F		MOUNTING STRIP SW96 (73631)		EA	1									5	20
P F	5305-273-7352	SCREW, MACHINE: contactor locking, No. 8-32 thd size, 1/4 in. lg		EA	6	*	*	*	*	*	*	*	*	5	21
P F	5305-141-5152	SCREW, MACHINE: contactor mtg, No. 10-32 thd size, 3/8 in. lg		EA	24	*	*	*	*	*	*	*	*	5	22
P F		CONTACTOR: water heater A202K2CX (79500)		EA	1	*	1	1	*	1	1	12	10	5	23
P F		STARTER, MOTOR: water pump A200K1CX (79500)		EA	1	*	1	1	*	1	1	12	10	5	24
P F		STARTER, MOTOR: fan A200K0CX (79500)		EA	4	1	2	4	1	2	4	48	40	5	25
P F	5305-560-2151	SCREW, MACHINE: strip mtg, No. 8-32 thd size, 3/8 in. lg		EA	12	*	*	*	*	*	*	*	*	5	26
P F	5310-828-0454	WASHER, FLAT: strip mtg, No. 8 screw size		EA	12	*	*	*	*	*	*	*	*	5	27
X2 F		MOUNTING STRIP: contactor and starter AMS13 (79500)		EA	3									5	28
P F	5310-056-3395	NUT, PLAIN, HEXAGON: control panel mtg, 3/8-16 thd size MS35649-2382 (96906)		EA	16	*	*	*	*	*	*	*	*	5	29
X2 F		WASHER, BEVEL: control panel mtg 117-101-5 (33438)		EA	16									5	30
P F	5310-960-3193	WASHER, FLAT: control panel mtg, 3/8 in. screw size		EA	16	*	*	*	*	*	*	*	*	5	31
P F	5305-269-3213	SCREW, CAP, HEXAGON HEAD: control panel mtg, 3/8-16 thd size, 1 1/4 in. lg MS90725-62 (96906)		EA	16	*	*	*	*	*	*	*	*	5	32
X2 F		CHANNEL, SUPPORT 117-101-4 (33438)		EA	2									5	33
P F	5305-208-7879	SCREW, MACHINE: wire tie mtg, No. 8-32 thd size, 1/2 in. lg		EA	4	*	*	*	*	*	*	*	*	5	34
X2 F		TIE, WIRE 117-101-9 (33438)		EA	4									5	35
P F	5310-997-1888	NUT, PLAIN, HEXAGON: sub panel mtg, 1/4-20 thd size MS35649-2252 (96906)		EA	18	*	*	*	*	*	*	*	*	5	36
P F	5310-809-4058	WASHER, FLAT: sub-panel mtg, 1/4 in. screw size MS27183-10 (96906)		EA	18	*	*	*	*	*	*	*	*	5	37
X2 F		SUB-PANEL 117-101-6 (33438)		EA	1									5	38
X2 F		WIRING HARNESS: control panel 117-101-8 (33438)		EA	1									5	39
X2 F		NUT, FLAT SHEET: door locking 17-10015-13 (94222)		EA	13									5	40
X2 D		ENCLOSURE 117-101-7 (33438)		EA	1									5	41
		GROUP 03 - MAKE-UP WATER SYSTEM													
P O	5310-950-0039	NUT, SELF-LOCKING, HEXAGON: U bolt, 3/8-24 thd size MS21044N6 (96906)		EA	8	*	*	*	*	*	*	*	*	6	1

(1) SMR CODE	(2) FEDERAL STOCK NUMBER	(3) DESCRIPTION REF NUMBER & MFR CODE	USABLE ON CODE	(4) UNIT OF MEAS	(5) QTY INC IN UNIT	(6) 30-DAY DS MAINT ALLOWANCE (a) 1-20	(b) 21-50	(c) 51-100	(7) 30-DAY GS MAINT ALLOWANCE (a) 1-20	(b) 21-50	(c) 51-100	(8) 1-YR ALW PER 100 EQUIP CNTGY	(9) DEPOT MAINT ALW PER 100 EQUIP	(10) ILLUSTRATION (a) FIG. NO.	(b) ITE NO
P O	5310-637-9541	WASHER, LOCK: water line U bolt, 3/8 in. screw size MS35338-46 (96906)		EA	8	*	*	*	*	*	*	*	*	6	
P O	5310-080-6004	WASHER, FLAT: U bolt, 3/8 in. screw size MS27183-14 (96906)		EA	8	*	*	*	*	*	*	*	*	6	
X2 O		BOLT, U: water line support, 3/8-24 thd size 10092-1 (90598)		EA	4									6	
X2 F		UNION, PIPE: priming line, 1/2 in.NPT FIG696-1-2 (82666)		EA	1									6	
X2 F		PIPE, PRIMING LINE: 1/2 in. NPT, 15 in. lg 10094-1-22 (90598)		EA	1									6	
P F		VALVE, GATE: priming line FIG7108-1-2 (76873)		EA	1	*	1	1	*	1	1	12	8	6	
X2 F		ELBOW, PIPE: priming line, 1/2 in. NPT, street FIG613-1-2 (82666)		EA	2									6	
X2 F		PIPE, PRIMING LINE: 1/2 in. NPT, 8 in. lg 10094-1-13 (90598)		EA	1									6	
X2 F		UNION, PIPE: water line 1 1/4 in. NPT FIG696-1-1-4 (82666)		EA	3									6	
X2 F		REDUCER, PIPE: water line, 3/4 X 1 1/4 in. NPT FIG678-1-1-4X3-4 (82666)		EA	2									6	
X2 F		NIPPLE, PIPE: water line to treatment tank, 3/4 in. NPT, 1 1/2 in. lg FIG343-3-4X1-1-2 (80996)		EA	2									6	
X2 O		CAP, PIPE: water pipe, 1 1/4 in. NPT FIG675-1-1-4 (82666)		EA	1									6	
X2 F		NIPPLE, PIPE: water line, 1 1/4 in. NPT, 7 in. lg FIG343-1-1-4X7 (80996)		EA	1									6	
X2 F		PIPE, WATER LINE: 1 1/4 in. NPT, 15 in. lg 10094-1-17 (90598)		EA	1									6	
X2 F		PIPE, WATER LINE: 1 1/4 in. NPT, 12 in. lg 10094-1-11 (90598)		EA	1									6	
X2 F		TEE, REDUCING: water line, 1 1/4 X 1 1/4 X 1/2 in. NPT FIG632-1-1-4X1-1-4X1-2 (82666)		EA	1									6	
X2 F		PIPE, WATER LINE: 1 1/4 in. NPT, 4 ft lg 10094-1-15 (90598)		EA	1									6	
X2 F		NIPPLE, PIPE: water line, 1 1/4 in. NPT, 2 in. lg FIG343-1-1-4X2 (80996)		EA	2									6	
P F		VALVE, CHECK: water line FIG134-1-1-4 (76873)		EA	1	*	1	1	*	1	1	12	8	6	2
X2 F		NIPPLE, PIPE: water line, 1 1/4 in. NPT, 9 in. lg FIG343-1-1-4X9 (80996)		EA	1									6	2
X2 F		TEE, PIPE: water line FIG631-1-1-4 (82666)		EA	1									6	2
X2 F		NIPPLE, PIPE: water line, 1 1/4 in. NPT, 5 in. lg FIG343-1-1-4X5 (80996)		EA	1									6	2
X2 F		ELBOW, PIPE: water line, 1 1/4 in. NPT, street FIG613-1-1-4 (82666)		EA	1									6	2

(1) SMR CODE	(2) FEDERAL STOCK NUMBER	(3) DESCRIPTION REF NUMBER & MFR CODE	USABLE ON CODE	(4) UNIT OF MEAS	(5) QTY INC IN UNIT	(6) 30-DAY DS MAINT ALLOWANCE (a) 1-20	(b) 21-50	(c) 51-100	(7) 30-DAY GS MAINT ALLOWANCE (a) 1-20	(b) 21-50	(c) 51-100	(8) 1-YR ALW PER 100 EQUIP CNTGY	(9) DEPOT MAINT ALW PER 100 EQUIP	(10) ILLUSTRATION (a) FIG. NO.	(b) ITEM NO.
X2 F		NIPPLE, PIPE: water line, 1 1/4 in. NPT, 2 in. lg FIG343-1-1-4X2 (80996)		EA	2									6	25
X2 F		TEE, PIPE: water line, 1 1/4 in. NPT FIG631-1-1-4 (82666)		EA	1									6	26
X2 F		ELBOW, PIPE: float valve water line, 1 1/4 in. NPT FIG601-1-1-4 (82666)		EA	1									6	27
X2 F		PIPE, WATER LINE: float valve, 1 1/4 in. NPT, 3 ft lg 10094-1-12 (90598)		EA	1									6	28
X2 F		ELBOW, PIPE: water line to float valve, 1 1/4 in. NPT street FIG613-1-1-4 (82666)		EA	1									6	29
P2 F		VALVE, FLOAT 171F1-1-4 (22508) Note: When ordering float valve, specify 6 in. float P/N 1A4219-1506 (22508)		EA	1	*	*	*	*	*	*	5	*	7	–
X2 F		NUT, PLAIN, HEXAGON: eye bolt mtg, 5/16-18 thd size 1A3421-1401 (22508)		EA	1									7	1
X2 F		BOLT, EYE: float rod 1E7957-1401 (22508)		EA	1									7	2
X2 F		NUT, PLAIN, HEXAGON: float rod, 3/8-16 thd size 1A3522-2412 (22508)		EA	1									7	3
X2 F		ROD, FLOAT 1H3877-2409 (22508)		EA	1									7	4
X2 F		FLOAT SPUD 1E7952-1401 (22508)		EA	1									7	5
P F		FLOAT: 6 in. 1A4219-1506 (22508)		EA	1	*	1	1	*	1	1	12	8	7	6
X2 F		NUT, SELF-LOCKING, HEXAGON: lever and link mtg, 1/4-28 thd size 1A9447-1899 (22508)		EA	3									7	7
X2 F		BOLT, MACHINE: lever and link, 1/4-28 thd size, 1 1/8 in. lg 1E4539-1401 (22508)		EA	3									7	8
X2 F		LEVER 000998-1201 (22508)		EA	1									7	9
X2 F		LINK, VERTICAL 1A7172-1201 (22508)		EA	1									7	10
X2 F		SCREW, MACHINE: yoke, 1/4-28 thd size, 3/4 in. lg 1A7352-1899 (22508)		EA	1									7	11
X2 F		YOKE 006630-1201 (22508)		EA	1									7	12
X2 F		CONNECTION, LEVER 1B3271-1401 (22508)		EA	1									7	13
X2 F		NUT, HEXAGON: stem 1A5180-1401 (22508)		EA	1									7	14
X1		BODY 2R5373-1201 (22508)		EA	1									7	15
X2 F		NUT, PACKING 1A6842-1401 (22508)		EA	1									7	16
X2 F		FOLLOWER, PACKING 0V0380-1401 (22508)		EA	1									7	17
P F		PACKING, TEFLON 1R5383-0699 (22508)		EA	1	3	5	10	3	5	10	120	100	7	18

(1) SMR CODE	(2) FEDERAL STOCK NUMBER	(3) DESCRIPTION REF NUMBER & MFR CODE	USABLE ON CODE	(4) UNIT OF MEAS	(5) QTY INC IN UNIT	(6) 30-DAY DS MAINT ALLOWANCE (a) 1-20	(b) 21-50	(c) 51-100	(7) 30-DAY GS MAINT ALLOWANCE (a) 1-20	(b) 21-50	(c) 51-100	(8) 1-YR ALW PER 100 EQUIP CNTGY	(9) DEPOT MAINT ALW PER 100 EQUIP	(10) ILLUSTRATIO (a) FIG. NO.	IT N
X2 F		BONNET 2V2757-1201 (22508)		EA	1									7	
P F		RING, SPLIT: piston 1V3678-0510 (22508)		EA	1	*	1	1	*	1	1	16	12	7	
P F		EXPANDER, RING 1V3684-1509 (22508)		EA	1	*	1	1	*	1	1	16	12	7	
X2 F		RING, RETAINING 1R5382-1898 (22508)		EA	1									7	
X2 F		NUT, HEXAGON: valve 1E3960-1899 (22508)		EA	1									7	
X2 F		WASHER, RETAINING: valve 1R5376-1401 (22508)		EA	1									7	
P F		PACKING, PREFORMED 1C4157-0699 (22508)		EA	1	3	5	10	3	5	10	120	100	7	
P F		VALVE, PILOT 1R5380-000A (22508)		EA	1	*	1	1	*	1	1	16	12	7	
X2 F		STEM, VALVE 1R5388-3516 (22508)		EA	1									7	
X2 F		PISTON 2V3681-1404 (22508)		EA	1									7	
X2 F		STRAINER AXSC1-1-4 (03933)		EA	1									8	
P O		ELEMENT, STRAINER 304SS020 (03933)		EA	1	1	1	2	1	1	2	24	20	8	
P F		VALVE, GATE: water line, 1 1/4 in. NPT FIG7108-1-1-4 (76873)		EA	2	*	1	1	*	1	1	12	10	9	
X1		NUT 2469X1-1-4-11 (76873)		EA	2									9	
X1		HANDWHEEL 2469X1-1-4-10 (76873)		EA	2									9	
X1		PACKING NUT 2469X1-1-4-9 (76873)		EA	2									9	
X1		GLAND 2469X1-1-4-8 (76873)		EA	2									9	
P O		PACKING, VALVE 2469X1-1-4-7 (76873)		EA	2	5	10	20	5	10	20	240	200	9	
X1		STUFFING BOX 2469X1-1-4-6 (76873)		EA	2									9	6
X1		UNION RING 2469X1-1-4-4 (76873)		EA	2									9	7
X1		BONNET 2469X1-1-4-5 (76873)		EA	2									9	8
X1		STEM 2469X1-1-4-3 (76873)		EA	2									9	9
X1		WEDGE 2469X1-1-4-2 (76873)		EA	2									9	10
X1		BODY 2469X1-1-4-1 (76873)		EA	2									9	11
P F	5310-950-0039	NUT, SELF-LOCKING, HEXAGON: treatment tank mtg, 3/8-24 thd size MS21044N6 (96906)		EA	4	*	*	*	*	*	*	*	*	10	1
P O	5310-080-6004	WASHER, FLAT: treatment tank mtg, 3/8 in. screw size MS27183-14 (96906)		EA	8	*	*	*	*	*	*	*	*	10	2

(1) SMR CODE	(2) FEDERAL STOCK NUMBER	(3) DESCRIPTION REF NUMBER & MFR CODE	USABLE ON CODE	(4) UNIT OF MEAS	(5) QTY INC IN UNIT	(6) 30-DAY DS MAINT ALLOWANCE (a) 1-20	(b) 21-50	(c) 51-100	(7) 30-DAY GS MAINT ALLOWANCE (a) 1-20	(b) 21-50	(c) 51-100	(8) 1-YR ALW PER 100 EQUIP CNTGY	(9) DEPOT MAINT ALW PER 100 EQUIP	(10) ILLUSTRATION (a) FIG. NO.	(b) ITEM NO.
P O	5305-269-2803	SCREW, CAP, HEXAGON HEAD: treatment tank mtg, 3/8-24 thd size, 1 in. lg MS90726-60 (96906)		EA	4	*	*	*	*	*	*	*	*	10	3
P O		VALVE, DRAIN: treatment tank 6660 (79470)		EA	4	1	2	3	1	2	3	36	30	10	4
X2 O		TANK ASSEMBLY WATER TREATMENT 10095-3-101 (90598)		EA	1									10	5
X2 O		LID, WATER TANK 20-1 (33533)		EA	1									10	6
P O		PACKING, PREFORMED 20-2 (33533)		EA	1	*	1	1	*	1	1	16	12	10	7
X2 O		STRAINER, TOP 20-3 (33533)		EA	1									10	8
X2 O		STRAINER, BOTTOM 20-4 (33533)		EA	1									10	9
		GROUP 04 - COOLING TOWER WATER SYSTEM													
X2 O		CAP, PIPE: water outlet line, ' in. NPT FIG1124-4 (80996)		EA	1									11	1
P O		GAGE, TEMPERATURE 4750MS2-20T0240 (76526)		EA	1	*	1	1	*	1	1	12	10	11	2
P O	5310-877-5796	NUT, SELF-LOCKING, HEXAGON: gage bracket mtg, 1/4-28 thd size MS21044N4 (96906)		EA	2	*	*	*	*	*	*	*	*	11	3
P O	5310-809-4058	WASHER, FLAT: gage bracket mtg, 1/4 in. screw size MS27183-10 (96906)		EA	4	*	*	*	*	*	*	*	*	11	4
P O	5305-068-0505	SCREW, CAP, HEXAGON HEAD: gage bracket mtg, 1/4-28 thd size, 5/8 in. lg MS90726-5 (96906)		EA	2	*	*	*	*	*	*	*	*	11	5
X2 O		BRACKET: gage mtg 10087 (90598)		EA	1									11	6
P O		GAGE PRESSURE: 1-4 NPT bottom connection, male TYPE1PCPSR6-60LB (38508)		EA	1	*	1	1	*	1	1	12	10	11	7
X2 F		ELBOW, PIPE: pressure gage FIG1103-1-4GALV (80996)		EA	1									11	8
X2 F		SOCKET, THERMOWELL: temperature gage 2-7MDCRS (76526)		EA	1									11	9
P F	5310-763-8920	NUT, PLAIN, HEXAGON: pipe mtg, 5/8-11 thd size MS51967-20 (96906)		EA	8	*	*	*	*	*	*	*	*	11	10
P F	5310-045-5001	WASHER, LOCK: flange mtg, 5/8 in. screw size MS35340-50 (96906)		EA	8	*	*	*	*	*	*	*	*	11	11
P F	5310-951-7209	WASHER, FLAT: flange mtg, 5/8 in. screw size MS27183-22 (96906)		EA	16	*	*	*	*	*	*	*	*	11	12
P F	5306-558-5419	BOLT, MACHINE: flange mtg, 5/8-11 thd size, 2 3/4 in. lg MS35355-162 (96906)		EA	8	*	*	*	*	*	*	*	*	11	13
X2 F		GASKET, ASBESTOS: filter outlet line 4-1-2X6-7-8X1-16 (80996)		EA	1									11	14
X2 F		NIPPLE, PIPE: water outlet line, 4 in. NPT, 3 in. lg FIG343-4INCLOSE (80996)		EA	1									11	15

(1) SMR CODE	(2) FEDERAL STOCK NUMBER	(3) DESCRIPTION REF NUMBER & MFR CODE / USABLE ON CODE	(4) UNIT OF MEAS	(5) QTY INC IN UNIT	(6) 30-DAY DS MAINT ALLOWANCE (a) 1-20	(b) 21-50	(c) 51-100	(7) 30-DAY GS MAINT ALLOWANCE (a) 1-20	(b) 21-50	(c) 51-100	(8) 1-YR ALW PER 100 EQUIP CNTGY	(9) DEPOT MAINT ALW PER 100 EQUIP	(10) ILLUSTRATION (a) FIG. NO.	(b) ITEM NO.
X2 F		COUPLING, PIPE: water outlet line, 4 in. NPT FIG336-4IN (80996)	EA	1									11	16
X2 F		LINE PUMP DISCHARGE 10095-1-103 (90598)	EA	1									11	17
P F	5310-763-8920	NUT, PLAIN, HEXAGON: pipe mtg, 5/8-11 thd size MS51967-20 (96906)	EA	16	*	*	*	*	*	*	*	*	11	18
P F	5310-045-5001	WASHER, LOCK: pipe mtg, 5/8 in. screw size MS35340-50 (96906)	EA	16	*	*	*	*	*	*	*	*	11	19
P F	5310-951-7209	WASHER, FLAT: pipe mtg, 5/8 in. screw size MS27183-22 (96906)	EA	32	*	*	*	*	*	*	*	*	11	20
P F	5306-558-5419	BOLT, MACHINE: pipe mtg, 5/8-11 thd size, 2 3/4 in. lg MS35355-162 (96906)	EA	16	*	*	*	*	*	*	*	*	11	21
X2 F		GASKET, ASBESTOS: filter inlet line 4-1-2X6-7-8X1-16 (80996)	EA	2									11	22
X2 F		LINE, PUMP DISCHARGE 10095-1-102 (90598)	EA	1									11	23
X2 F		FLANGE PIPE: pump outlet 130-3X9 (78824)	EA	1									11	24
X2 F		NIPPLE, PIPE: pump outlet, 3 in. NPT, 3 in. lg FIG343-3X3 (80996)	EA	1									11	25
P O		VALVE, DRAIN: strainer 6660 (79470)	EA	2	REF	REF	REF	REF	REF	REF	REF	REF	12	1
X2 O		BUSHING, PIPE: strainer valve, 1/4 X 3/8 in. NPT FIG383-3-8X1-4 (80996)	EA	2									12	2
X2 O		ELBOW, PIPE: strainer valve, 3/8 in. NPT street FIG1103-3-8 (80996)	EA	2									12	3
P F	5310-877-5795	NUT, SELF-LOCKING, HEXAGON: strainer assembly mtg, 1/2-20 thd size MS21044N8 (96906)	EA	4	*	*	*	*	*	*	*	*	12	4
P F	5310-809-5998	WASHER, FLAT: strainer assembly mtg, 1/2 in. screw size MS27183-18 (96906)	EA	8	*	*	*	*	*	*	*	*	12	5
P F	5305-719-5240	SCREW, CAP, HEXAGON HEAD: strainer assembly mtg, 1/2-20 thd size, 2 1/2 in. lg MS90727-117 (96906)	EA	4	*	*	*	*	*	*	*	*	12	6
X2 F		SPACER: strainer assembly 10090-1 (90598)	EA	2									12	7
X2 F		STRAINER ASSEMBLY 50-4IN (73124)	EA	1									12	—
P O	5330-620-7122	GASKET, RUBBER: strainer element cover 50-13-4IN (73124)	EA	2	*	1	1	*	1	1	12	10	12	8
X2 F		COVER, ELEMENT 50-12-4IN (73124)	EA	2									12	9
P O	3655-302-6149	ELEMENT, STRAINER 50-8-4IN (73124)	EA	2	*	1	1	*	1	1	12	10	12	10
X2 F		NUT, PLAIN, HEXAGON: bonnet mtg, 3/4-10 thd size 50-22-4IN (73124)	EA	2									12	11
X2 F		NUT, PLAIN, HEXAGON: packing gland and wheel mtg, 5/8-11 thd size 50-20-4IN (73124)	EA	5									12	12

(1) SMR CODE	(2) FEDERAL STOCK NUMBER	(3) DESCRIPTION REF NUMBER & MFR CODE	USABLE ON CODE	(4) UNIT OF MEAS	(5) QTY INC IN UNIT	(6) 30-DAY DS MAINT ALLOWANCE (a) 1-20	(b) 21-50	(c) 51-100	(7) 30-DAY GS MAINT ALLOWANCE (a) 1-20	(b) 21-50	(c) 51-100	(8) 1-YR ALW PER 100 EQUIP CNTGY	(9) DEPOT MAINT ALW PER 100 EQUIP	(10) ILLUSTRATION (a) FIG. NO.	(b) ITEM NO.
X2 F		HANDWHEEL: key control 50-14-4IN (73124)		EA	1									12	13
X2 F		NUT, PLAIN, HEXAGON: jack collar 7/16-14 thd size 50-23-4IN (73124)		EA	1									12	14
X2 F		SCREW, CAP, HEXAGON HEAD: jack collar, 7/16-14 thd size, 2 3/4 in. lg 50-24-4IN (73124)		EA	1									12	15
X2 F		SETSCREW: valve handle, 5/16-18 thd size, 1 1/4 in. lg. 50-25-4IN (73124)		EA	1									12	16
X2 F		HANDLE, VALVE 50-7-4IN (73124)		EA	1									12	17
X2 F		SCREW, JACK 50-6-4IN (73124)		EA	1									12	18
X2 F		COLLAR, JACK 50-5-4IN (73124)		EA	1									12	19
X2 F		BONNET, JACK 50-4-4IN (73124)		EA	1									12	20
X2 F		GLAND, PACKING 50-3-4IN (73124)		EA	1									12	21
X2 F		RING, PACKING 50-16-4IN (73124)		EA	2									12	22
X2 F		WASHER, PACKING RETAINER 50-15-4IN (73124)		EA	2									12	23
X2 F		KEY, CONTROL 50-2-4IN (73124)		EA	1									12	24
X2 F		STUD, YOKE 50-10-4IN (73124)		EA	4									12	25
X2 F		YOKE SCREW 50-11-4IN (73124)		EA	2									12	26
X2 F		YOKE, STRAINER COMPARTMENT 50-9-4IN (73124)		EA	2									12	27
X2 F		STUD, PLAIN: bonnet mtg, 3/4-10 thd size 50-21-4IN (73124)		EA	2									12	28
X2 F		STUD, PLAIN: packing gland mtg, 5/8-11 thd size 50-19-4IN (73124)		EA	4									12	29
X2 O		PLUG, PIPE: body drain, 1 1/4 in. NPT 50-18-4IN (73124)		EA	3									12	30
X1		BODY 50-1-4IN (73124)		EA	1									12	31
P O	5310-950-0039	NUT, SELF-LOCKING, HEXAGON: U bolt mtg, 3/8-24 thd size MS21044N6 (96906)		EA	4	*	*	*	*	*	*	*	*	13	1
P O	5310-080-6004	WASHER, FLAT: U bolt mtg, 3/8 in. screw size MS27183-14 (96906)		EA	4	*	*	*	*	*	*	*	*	13	2
X2 O		BOLT, U: pump suction line 10092-2 (90598)		EA	2									13	3
P F	5310-763-8920	NUT, PLAIN, HEXAGON: flange mtg, 5/8-11 thd size MS51967-20 (96906)		EA	8	*	*	*	*	*	*	*	*	13	4
P F	5310-045-5001	WASHER, LOCK: flange mtg, 5/8 in. screw size MS35340-50 (96906)		EA	8	*	*	*	*	*	*	*	*	13	5

(1) SMR CODE	(2) FEDERAL STOCK NUMBER	(3) DESCRIPTION REF NUMBER & MFR CODE	USABLE ON CODE	(4) UNIT OF MEAS	(5) QTY INC IN UNIT	(6) 30-DAY DS MAINT ALLOWANCE (a) 1-20	(b) 21-50	(c) 51-100	(7) 30-DAY GS MAINT ALLOWANCE (a) 1-20	(b) 21-50	(c) 51-100	(8) 1-YR ALW PER 100 EQUIP CNTGY	(9) DEPOT MAINT ALW PER 100 EQUIP	(10) ILLUSTRATION (a) FIG. NO.	(b) ITEM NO.
P F	5310-951-7209	WASHER, FLAT: flange mtg, 5/8 in. MS27183-22 (96906)		EA	16	*	*	*	*	*	*	*	*	13	6
P F	5306-558-5419	BOLT, MACHINE: flange mtg, 5/8-11 thd size, 2 3/4 in. lg MS35355-162 (96906)		EA	8	*	*	*	*	*	*	*	*	13	7
X2 F		GASKET, ASBESTOS: suction line flange 4-1-2X6-7-8X1-16 (80996)		EA	1									13	8
X2 F		FLANGE, PIPE: pump suction line 130-4X9 (78824)		EA	1									13	9
X2 F		NIPPLE, PIPE: pump suction line, 3 in. NPT, 3 in. lg FIG343-3X3 (80996)		EA	1									13	10
X2 F		LINE, PUMP SUCTION 10095-2-102 (90598)		EA	1									13	11
P O		VALVE, DRAIN: foot valve 140 (79470)		EA	1	*	1	1	*	1	1	12	8	13	12
P2 F		VALVE, FOOT: water suction line 394SIZE4IN (14959)		EA	1	*	*	*	*	*	*	5	*	13	13
X2 F		NUT, PLAIN, HEXAGON: strainer mtg, 3/8-16 thd size A1463 (14959)		EA	4									14	1
X2 F		BOLT, SQUARE HEAD: strainer mtg, 3/8-16 thd size, 2 in. lg L8585 (14959)		EA	4									14	2
X1		STRAINER B8193 (14959)		EA	1									14	3
X2 F		SEAT, VALVE B8244 (14959)		EA	1									14	4
X1		BODY B8176 (14959)		EA	1									14	5
X2 F		NUT, PLAIN, SQUARE: disc A3099 (14959)		EA	1									14	6
X2 F		WASHER, FLAT: disc bolt, 7/16 in. screw size A3107 (14959)		EA	4									14	7
P F		GASKET, WASHER: disc bolt LC11343 (14959)		EA	1	*	1	2	*	1	2	18	12	14	8
X2 F		BOLT, SQUARE HEAD: disc, 7/16 X 1 1/2 L7538 (14959)		EA	1									14	9
X2 F		DISC B8258 (14959)		EA	1									14	10
X2 F		WASHER, DISC B8281 (14959)		EA	1									14	11
P F		DISC, FACE B25479 (14959)		EA	1	*	1	2	*	1	2	18	12	14	12
P F	5310-950-0039	NUT, SELF-LOCKING, HEXAGON: pump mtg, 3/8-24 thd size MS21044N6 (96906)		EA	4	*	*	*	*	*	*	*	*	15	1
P F	5310-080-6004	WASHER, FLAT: pump mtg, 3/8 in. screw size MS27183-14 (96906)		EA	8	*	*	*	*	*	*	*	*	15	2
P F	5305-269-2805	SCREW, CAP, HEXAGON HEAD: pump mtg, 3/8-24 thd size, 1 1/4 in. lg MS90726-62 (96906)		EA	4	*	*	*	*	*	*	*	*	15	3
X2 F		SUPPORT: water circulating pump 10088-1 (90598)		EA	1									15	4

(1) SMR CODE	(2) FEDERAL STOCK NUMBER	(3) DESCRIPTION REF NUMBER & MFR CODE	USABLE ON CODE	(4) UNIT OF MEAS	(5) QTY INC IN UNIT	(6) 30-DAY DS MAINT ALLOWANCE (a) 1-20	(b) 21-50	(c) 51-100	(7) 30-DAY GS MAINT ALLOWANCE (a) 1-20	(b) 21-50	(c) 51-100	(8) 1-YR ALW PER 100 EQUIP CNTGY	(9) DEPOT MAINT ALW PER 100 EQUIP	(10) ILLUSTRATION (a) FIG. NO.	(b) ITEM NO.
P2 F S	4320-469-7706	PUMP, CENTRIFUGAL GAHABF3X3X6-215 (04579)		EA	1	*	*	*	*	*	*	5	*	15	–
X2 F		PLUG, PIPE: casing 600-0096-087 (04579)		EA	2									15	5
X2 F		SCREW, CAP, HEXAGON HEAD: casing mtg 168-0488-080 (04579)		EA	4									15	6
P F		RING, WEARING 676-1550-208 (04579)		EA	1	*	1	1	*	1	1	12	8	15	7
X1		CASING 180-1534-010 (04579)		EA	1									15	8
P F	5330-248-9413	GASKET: casing to bracket 364-0446-457 (04579)		EA	1	*	1	1	*	1	1	12	8	15	9
P F	5305-868-7680	SCREW, CAP, HEXAGON HEAD: impeller mtg 168-0251-113 (04579)		EA	1	*	1	1	*	1	1	12	8	15	10
P F	5310-868-7684	WASHER, FLAT: impeller mtg 908-0599-113 (04579)		EA	1	*	1	1	*	1	1	12	8	15	11
P F		IMPELLER, PUMP 444-1801-208 (04579)		EA	1	*	1	1	*	1	1	12	8	15	12
P F	2930-868-7683	KEY, SHAFT 472-0105-107 (04579)		EA	1	*	1	1	*	1	1	12	8	15	13
P F	4320-920-0113	SEAL ASSEMBLY: shaft 712-1004-764 (04579)		EA	1	*	1	1	*	1	1	12	8	15	14
X2 F		SCREW, CAP, HEXAGON HEAD: bracket mtg 168-0380-359 (04579)		EA	4									15	15
X2 F		PLUG, PIPE: bracket 600-0095-087 (04579)		EA	1									15	16
X2 F		BRACKET, PUMP 116-0235-010 (04579)		EA	1									15	17
X2 F		SLINGER, SHAFT 764-1002-478 (04579)		EA	1									15	18
X2 H		MOTOR, AC: circulating pump 215TFR608BB (38151)		EA	1									15	19
X2 F		SCREW, MACHINE: conduit box cover mtg, 1/4-20 thd size, 3/8 in. lg E7531-37S (38151)		EA	2									16	1
X2 F		COVER, CONDUIT BOX B16535C (38151)		EA	1									16	2
X2 F		GASKET: conduit box cover E61590-1 (38151)		EA	1									16	3
X2 F		SCREW, MACHINE: conduit box mtg, 1/4-20 thd size, 3/8 in. lg E7531-37S (38151)		EA	2									16	4
X2 F		MOUNTING HALF: conduit box A61534AC (38151)		EA	1									16	5
X2 F		GASKET: conduit box E61823-1 (38151)		EA	1									16	6
X2 F		SCREW, CAP, HEXAGON HEAD: cover mtg, 1/4-20 thd size, 1/2 in. lg E7520-50S (38151)		EA	4									16	7
X2 F		COVER, FAN C82040C (38151)		EA	1									16	8
X2 F		NUT, PLAIN, HEXAGON: fan, 1/4-20 thd size E7551-18S (38151)		EA	2									16	9
X2 F		WASHER, LOCK: fan, 1/4 in. screw size E7653-2S (38151)		EA	2									16	10

(1) SMR CODE	(2) FEDERAL STOCK NUMBER	(3) DESCRIPTION REF NUMBER & MFR CODE	USABLE ON CODE	(4) UNIT OF MEAS	(5) QTY INC IN UNIT	(6) 30-DAY DS MAINT ALLOWANCE (a) 1-20	(b) 21-50	(c) 51-100	(7) 30-DAY GS MAINT ALLOWANCE (a) 1-20	(b) 21-50	(c) 51-100	(8) 1-YR ALW PER 100 EQUIP CNTGY	(9) DEPOT MAINT ALW PER 100 EQUIP	(10) ILLUSTRATION (a) FIG. NO.	(b) ITEM NO.
X2 F		SCREW, CAP, HEXAGON HEAD: fan, 1/4-20 thd size, 1 1/2 in. lg E7520-150S (38151)		EA	2									16	11
X2 F		FAN, EXTERIOR AA80939C1A (38151)		EA	1									16	12
X2 F		SLINGER, EXTERNAL A7964-2 (38151)		EA	1									16	13
X2 F		PLUG, PIPE: lubrication pipe, 1/8 in. NPT E4850-1 (38151)		EA	4									16	14
X2 F		COUPLING, PIPE: lubrication, 1/8 in. NPT E11276-1 (38151)		EA	2									16	15
X2 F		NIPPLE, PIPE: lubrication, 1/8 in. NPT, 3 1/2 in. lg A7625-350 (38151)		EA	2									16	16
X2 F		NUT, PLAIN, HEXAGON: bracket mtg, 5/16-18 thd size E7551-2S (38151)		EA	8									16	17
X2 F		STUD, PLAIN: bracket mtg, 5/16-18 thd size, 12 1/4 in. lg A11956-1225S (38151)		EA	4									16	18
X2 F		SCREW, MACHINE: retainer mtg, No. 10-32 thd size, 1 3/8 in. lg E7514-137S (38151)		EA	2									16	19
X2 F		RETAINER, BEARING E8954-2 (38151)		EA	1									16	20
P F	3110-144-8648	BEARING, BALL 77507 (38151)		EA	1	*	1	1	*	1	1	12	10	16	21
X2 F		FLINGER, WASHER E4023-32 (38151)		EA	1									16	22
X2 F		BRACKET, REAR A81635CC (38151)		EA	1									16	23
X2 F		BRACKET, FRONT A82436AC (38151)		EA	1									16	24
X2 H		SHAFT, MOTOR AA83393-875 (38151)		EA	1									16	25
X2 H		ROTOR ASSEMBLY AAF102K40AG21 (38151)		EA	1									16	26
X2 F		SPRING, LOADING A7661-25 (38151)		EA	1									16	27
P F	3110-144-8622	BEARING, BALL 77505 (38151)		EA	1	*	1	1	*	1	1	12	10	16	28
X2 H		STATOR H215216-2 (38151)		EA	1									16	29
X2 F		BODY ASSEMBLY AC81195-100 (38151)		EA	1									16	30
X2 F		CLEVIS, ADJUSTABLE: manifold support FIG260-3 (80996)		EA	4									17	1
X2 F		UNION, PIPE: manifold FIG463-2GALV (80996)		EA	8									17	2
X2 F		ELBOW, PIPE: spray header FIG613-2 (82666)		EA	4									17	3
P F	5310-763-8920	NUT, PLAIN, HEXAGON: manifold, 5/8-11 thd size MS51967-20 (96906)		EA	8									17	4

(1) SMR CODE	(2) FEDERAL STOCK NUMBER	(3) DESCRIPTION REF NUMBER & MFR CODE	USABLE ON CODE	(4) UNIT OF MEAS	(5) QTY INC IN UNIT	(6) 30-DAY DS MAINT ALLOWANCE (a) 1-20	(b) 21-50	(c) 51-100	(7) 30-DAY GS MAINT ALLOWANCE (a) 1-20	(b) 21-50	(c) 51-100	(8) 1-YR. ALW PER 100 EQUIP CNTGY	(9) DEPOT MAINT ALW PER 100 EQUIP	(10) ILLUSTRATION (a) FIG. NO.	(b) ITEM NO.
P F	5310-045-5001	WASHER, LOCK: manifold, 5/8 in. screw size MS35340-50 (96906)		EA	8	*	*	*	*	*	*	*	*	17	5
P F	5310-951-7209	WASHER, FLAT: manifold, 5/8 in. screw size MS27183-22 (96906)		EA	16	*	*	*	*	*	*	*	*	17	6
P F	5306-558-5419	BOLT, MACHINE: manifold, 5/8-11 thd size, 2 3/4 in. lg MS35355-162 (96906)		EA	8	*	*	*	*	*	*	*	*	17	7
X2 F		GASKET: manifold 3-1-2X5-3-8X1-16 (80996)		EA	2									17	8
X2 F		NIPPLE, PIPE: gate valve outlet FIG343-2 (80996)		EA	8									17	9
X2 F		MANIFOLD, RIGHT HAND 10094-2-102 (90598)		EA	1									17	10
P O	5310-950-0039	NUT, PLAIN, HEXAGON: U bolt mtg, 3/8-24 thd size MS21044N6 (96906)		EA	2	*	*	*	*	*	*	*	*	18	1
P O	5310-637-9541	WASHER, LOCK: U bolt mtg, 3/8 in. screw size MS35338-46 (96906)		EA	2	*	*	*	*	*	*	*	*	18	2
P O	5310-080-6004	WASHER, FLAT: U bolt mtg, 3/8 in. screw size MS27183-14 (96906)		EA	2	*	*	*	*	*	*	*	*	18	3
X2 O		U BOLT: inlet water line support 10092-2 (90598)		EA	1									18	4
P O		GAGE, TEMPERATURE: water inlet line 4750MS2-20T0240 (76526)		EA	1	REF	REF	REF	REF	REF	REF	REF	REF	18	5
P O	5305-068-0506	SCREW, CAP, HEXAGON HEAD: gage bracket mtg, 1/4-20 thd size, 3/4 in. lg MS90726-6 (96906)		EA	2	*	*	*	*	*	*	*	*	18	6
P O	5310-582-5965	WASHER, LOCK: gage bracket mtg, 1/4 in. screw size MS35338-44 (96906)		EA	2	*	*	*	*	*	*	*	*	18	7
P O	5310-809-4058	WASHER, FLAT: gage bracket mtg, 1/4 in. size MS27183-10 (96906)		EA	2	*	*	*	*	*	*	*	*	18	8
X2 O		BRACKET: gage mtg 10081 (90598)		EA	1									18	9
P O		GAGE, PRESSURE: 1-4 NPT bottom conn, male TYPE1PCPSR6-60LB (38508)		EA	1	REF	REF	REF	REF	REF	REF	REF	REF	18	10
X2 F		SOCKET, THERMOWELL: temperature gage 2-7MDCRS (76526)		EA	1									18	11
X2 O		CAP, PIPE: water inlet pipe FIG1124-4 (80996)		EA	1									18	12
X2 F		NIPPLE, PIPE: water inlet line 4 in. FIG343-4INCLOSE (80996)		EA	1									18	13
X2 F		ELBOW, PIPE: water inlet line FIG602-4X3 (82666)		EA	1									18	14
X2 F		MANIFOLD, LEFT HAND 10094-2-103 (90598)		EA	1									18	15
P F		VALVE, GATE FIG7108-2 (76873)		EA	8	1	2	4	1	2	4	48	30	19	-
X1		NUT 2469X2-11 (76873)		EA	8									19	1
X1		HANDWHEEL 2469X2-10 (76873)		EA	8									19	2

(1) SMR CODE	(2) FEDERAL STOCK NUMBER	(3) DESCRIPTION REF NUMBER & MFR CODE	USABLE ON CODE	(4) UNIT OF MEAS	(5) QTY INC IN UNIT	(6) 30-DAY DS MAINT ALLOWANCE (a) 1-20	(b) 21-50	(c) 51-100	(7) 30-DAY GS MAINT ALLOWANCE (a) 1-20	(b) 21-50	(c) 51-100	(8) 1-YR ALW PER 100 EQUIP CNTGY	(9) DEPOT MAINT ALW PER 100 EQUIP	(10) ILLUSTRATION (a) FIG. NO.	(b) ITEM NO.
X1		UNION RING 2469X2-4 (76873)		EA	8									19	3
X1		PACKING NUT 2469X2-9 (76873)		EA	8									19	4
X1		GLAND 2469X2-8 (76873)		EA	8									19	5
X1		WEDGE 2469X2-2 (76873)		EA	8									19	6
X1		BONNET 2469X2-5 (76873)		EA	8									19	7
X1		STEM 2469X2-3 (76873)		EA	8									19	8
P O		PACKING, VALVE 2469X2-7 (76873)		EA	8	18	38	75	18	38	75	900	800	19	9
X1		STUFFING BOX 2469X2-6 (76873)		EA	8									19	10
X1		BODY 2469X2-1 (76873)		EA	8									19	11
		GROUP 05 - COOLING TOWER													
X2 DR		COOLING TOWER 7078 (75375)		EA	1										
P O	5310-732-0558	NUT, PLAIN, HEXAGON: blower cover mtg, 3/8-16 thd size MS51967-8 (96906)		EA	32	*	*	*	*	*	*	*	*	20	1
P O	5310-637-9541	WASHER, LOCK: blower cover mtg, 3/8 in. screw size MS35338-46 (96906)		EA	32	*	*	*	*	*	*	*	*	20	2
P O	5310-809-4061	WASHER, FLAT: blower cover mtg, 3/8 in. screw size MS27183-15 (96906)		EA	32	*	*	*	*	*	*	*	*	20	3
P O	5305-269-3211	SCREW, CAP, HEXAGON HEAD: blower cover mtg, 3/8-16 thd size,1 in. lg MS90725-60 (96906)		EA	32	*	*	*	*	*	*	*	*	20	4
X2 O		COVER, FAN 7078-5 (75375)		EA	4									20	5
X2 O		SCREEN: blower 43-00348-004 (51064)		EA	4									20	6
P F	5310-732-0558	NUT, PLAIN, HEXAGON: fan tube mtg, 3/8-16 thd size		EA	32	*	*	*	*	*	*	*	*	20	7
P F	5310-637-9541	WASHER, LOCK: fan tube mtg, 3/8 in. screw size MS35338-46 (96906)		EA	32	*	*	*	*	*	*	*	*	20	8
X2 F		GASKET: fan housing 7078-3 (75375)		EA	4									20	9
P2 F S		FAN TUBE, AXIAL DT24-6G36L8 (35197)		EA	4	*	*	*	*	*	*	5	*	20	10
P F	5305-071-2234	SCREW, CAP, HEXAGON HEAD: fan bushing, 1/4-20 thd size, 1 3/4 in. lg MS90725-17 (96906)		EA	12	*	*	*	*	*	*	*	*	21	1
P F	5310-550-1130	WASHER, LOCK: fan bushing, 1/4 in. screw size MS35333-40 (96906)		EA	12	*	*	*	*	*	*	*	*	21	2
X2 F		BUSHING, FAN 725539-09 (35197)		EA	4									21	3

(1) SMR CODE	(2) FEDERAL STOCK NUMBER	(3) DESCRIPTION REF NUMBER & MFR CODE	USABLE ON CODE	(4) UNIT OF MEAS	(5) QTY INC IN UNIT	(6) 30-DAY DS MAINT ALLOWANCE (a) 1-20	(b) 21-50	(c) 51-100	(7) 30-DAY GS MAINT ALLOWANCE (a) 1-20	(b) 21-50	(c) 51-100	(8) 1-YR ALW PER 100 EQUIP CNTGY	(9) DEPOT MAINT ALW PER 100 EQUIP	(10) ILLUSTRATION (a) FIG. NO.	(b) ITEM NO.
X1		IMPELLER 78307667 (35197)		EA	4									21	4
P F	5310-732-0558	NUT, PLAIN, HEXAGON: blower motor mtg, 3/8-16 thd size		EA	16	*	*	*	*	*	*	*	*	21	5
P F	5310-637-9541	WASHER, LOCK: blower motor mtg, 3/8 in. screw size MS35338-46 (96906)		EA	16	*	*	*	*	*	*	*	*	21	6
P F	5310-809-4061	WASHER, FLAT: blower motor mtg, 3/8 in. screw size MS27183-15 (96906)		EA	16	*	*	*	*	*	*	*	*	21	7
P F	5305-269-3211	SCREW, CAP, HEXAGON HEAD: blower motor mtg, 3/8-16 thd size, 1 in. lg MS90725-60 (96906)		EA	16	*	*	*	*	*	*	*	*	21	8
X2 F		HOUSING, FAN 775855-02 (35197)		EA	4									21	9
X2 HR		MOTOR 73192 (92940)		EA	4									21	10
P F	5305-068-0502	SCREW, CAP, HEXAGON HEAD: conduit box cover mtg, 1/4-20 thd size, 3/4 in. lg MS90725-6 (96906)		EA	8	*	*	*	*	*	*	*	*	22	1
P F	5310-582-5965	WASHER, LOCK: conduit box cover mtg, 1/4 in. screw size MS35338-44 (96906)		EA	8	*	*	*	*	*	*	*	*	22	2
X2 F		COVER, CONDUIT BOX B567-02 (92940)		EA	4									22	3
P F	5305-068-0502	SCREW, CAP, HEXAGON HEAD: conduit box mtg, 1/4-20 thd size, 3/4 in. lg MS90725-6 (96906)		EA	16	*	*	*	*	*	*	*	*	22	4
P F	5310-582-5965	WASHER, LOCK: conduit box mtg, 1/4 in. screw size MS35338-44 (96906)		EA	16	*	*	*	*	*	*	*	*	22	5
X2 F		BOX, CONDUIT B566-06 (92940)		EA	4									22	6
X2 F		GASKET: conduit box A2509-01 (92940)		EA	4									22	7
X2 F		SPACER, CONDUIT A1631-01 (92940)		EA	4									22	8
P F	5305-068-0500	SCREW, CAP, HEXAGON HEAD: end shield mtg, 1/4-20 thd size, 1/2 in. lg MS90725-3 (96906)		EA	12	*	*	*	*	*	*	*	*	22	9
P F	5310-582-5965	WASHER, LOCK: end shield mtg, 1/4 in. screw size MS35338-44 (96906)		EA	12	*	*	*	*	*	*	*	*	22	10
X2 F		GUARD, FAN C557-03 (92940)		EA	4									22	11
X2 F		FAN C1690-01 (92940)		EA	4									22	12
X2 F		RING, LOCK A9285-04 (92940)		EA	4									22	13
X2 F		BOLT, MACHINE: thru, 1/4-20 thd size, 11 1/8 in. lg A8880-06 (92940)		EA	16									22	14
X2 F		SHIELD, SHAFT END C2405-03 (92940)		EA	4									22	15
X2 F		SPRING, SHAFT A2292-04 (92940)		EA	4									22	16

(1) SMR CODE	(2) FEDERAL STOCK NUMBER	(3) DESCRIPTION REF NUMBER & MFR CODE	USABLE ON CODE	(4) UNIT OF MEAS	(5) QTY INC IN UNIT	(6) 30-DAY DS MAINT ALLOWANCE (a) 1-20	(b) 21-50	(c) 51-100	(7) 30-DAY GS MAINT ALLOWANCE (a) 1-20	(b) 21-50	(c) 51-100	(8) 1-YR ALW PER 100 EQUIP CNTGY	(9) DEPOT MAINT ALW PER 100 EQUIP	(10) ILLUSTRATION (a) FIG. NO.	(b) ITEM NO.
X2 F		SHIELD, END D165-12 (92940)		EA	4									22	17
X2 F		SPACER A8256-01 (92940)		EA	4									22	18
P F	3110-144-8603	BEARING, BALL: fan end 77204 (29337)		EA	4	1	2	4	1	2	4	48	40	22	19
P F	3110-144-8637	BEARING, BALL: drive end 77206 (29337)		EA	4	1	2	4	1	2	4	48	40	22	20
X2 H		ROTOR AND SHAFT 73192ROT (92940)		EA	4									22	21
P F	5305-269-3211	SCREW, CAP, HEXAGON HEAD: base mtg, 3/8-16 thd size, 1 in. lg MS90725-60 (96906)		EA	16	*	*	*	*	*	*	*	*	22	22
P F	5310-637-9541	WASHER, LOCK: base mtg, 3/8 in. screw size MS35338-46 (96906)		EA	16	*	*	*	*	*	*	*	*	22	23
X2 F		BASE, MOTOR D246-01 (92940)		EA	4									22	24
X2 F		STATOR AND FRAME 73192STA (92940)		EA	4									22	25
P F	5310-768-0318	NUT, PLAIN, HEXAGON: ladder mtg, 1/2-13 thd size MS51967-14 (96906)		EA	6	*	*	*	*	*	*	*	*	23	1
P F	5305-782-9495	SCREW, CAP, HEXAGON HEAD: ladder mtg, 1/2-13 thd size, 1 1/4 in. lg MS90725-111 (96906)		EA	6	*	*	*	*	*	*	*	*	23	2
X2 F		LADDER 7078-16 (75375)		EA	1									23	3
P O	5310-761-6882	NUT, PLAIN, HEXAGON: cover plate mtg, 1/4-20 thd size MS51967-2 (96906)		EA	24	*	*	*	*	*	*	*	*	23	4
X2 O		PLATE, COVER: spray header access 7078-14 (75375)		EA	8									23	5
X2 O		HEADER ASSEMBLY, SPRAY 7078-9 (75375)		EA	8									24	1
P O		NOZZLE, SPRAY 6KW (56308)		EA	56	1	3	5	1	3	5	60	50	24	2
X2 O		PIPE, SPRAY 7118-1 (75375)		EA	8									24	3
X2 F		DEMISTER 7118-4 (04257)		EA	20									24	4
P F	5305-052-6923	SCREW, TAPPING: screen mtg, 1/4-20 thd size, 3/4 in. lg MS24629-59 (96906)		EA	352	*	*	*	*	*	*	*	*	24	5
P F	5310-809-4058	WASHER, FLAT: screen mtg, 1/4 in. screw size MS27183-10 (96906)		EA	352	*	*	*	*	*	*	*	*	24	6
X2 F		SCREEN, PACKING: saddle and holddown 7118-5 (75375)		EA	8									24	7
X2 F		PACKING 1INCHTELLERETTE (16605)		FT	160									24	8
P F	5310-761-6882	NUT, PLAIN, HEXAGON: shutter mtg, 1/4-20 thd size MS51967-2 (96906)		EA	48	*	*	*	*	*	*	*	*	25	1
P F	5310-809-4058	WASHER, FLAT: shutter mtg, 1/4 in. screw size MS27183-10 (96906)		EA	48	*	*	*	*	*	*	*	*	25	2

(1) SMR CODE	(2) FEDERAL STOCK NUMBER	(3) DESCRIPTION REF NUMBER & MFR CODE / USABLE ON CODE	(4) UNIT OF MEAS	(5) QTY INC IN UNIT	(6) 30-DAY DS MAINT ALLOWANCE (a) 1-20	(b) 21-50	(c) 51-100	(7) 30-DAY GS MAINT ALLOWANCE (a) 1-20	(b) 21-50	(c) 51-100	(8) 1-YR ALW PER 100 EQUIP CNTGY	(9) DEPOT MAINT ALW PER 100 EQUIP	(10) ILLUSTRATION (a) FIG. NO.	(b) ITEM NO.
X2 F		SHUTTER, AIR: cooling tower CBS4-54X12 (34081)	EA	4									25	3
X2 F		GASKET: shutter, long 7078-20 (75375)	EA	8									25	4
X2 F		GASKET: shutter, short 7078-10 (75375)	EA	8									25	5
P 0	5310-761-6882	NUT, PLAIN, HEXAGON: sump cover mtg, 1/4-20 thd size MS51967-2 (96906)	EA	15	*	*	*	*	*	*	*	*	26	1
P 0	5310-582-5965	WASHER, LOCK: sump cover mtg, 1/4 in. screw size MS35338-44 (96906)	EA	15	*	*	*	*	*	*	*	*	26	2
P 0	5310-809-4058	WASHER, FLAT: sump cover mtg, 1/4 in. screw size MS27183-10 (96906)	EA	15	*	*	*	*	*	*	*	*	26	3
X2 0		COVER, SUMP 7078-8 (75375)	EA	1									26	4
P F	4730-221-2143	PLUG, PIPE: tower drain, 1 1/2 in. NPT MS20913-12S (96906)	EA	4	*	*	*	*	*	*	*	*	26	5
X1		ENCLOSURE 7078-1 (75375)	EA	1									26	6
		GROUP 06 - TRAILER ASSEMBLY												
X2 DR		SEMI-TRAILER DDHDG1206 (80328)	EA	1									27	-
P 0	5305-855-0966	SCREW, TAPPING: reflector mtg, No. 8-32 thd size, 7/8 in. lg MS24629-39 (96905)	EA	4	*	*	*	*	*	*	*	*	27	1
P 0	5310-877-5797	NUT, SELF-LOCKING, HEXAGON: reflector mtg, No. 10-32 thd size MS21044N3 (96906)	EA	16	*	*	*	*	*	*	*	*	27	2
P 0	5305-993-1851	SCREW, MACHINE: reflector mtg, No. 10-32 thd size, 1 in. lg MS35207-267 (96906)	EA	16	*	*	*	*	*	*	*	*	27	3
P 0	9905-202-3639	REFLECTOR, AMBER MS35387-2 (96906)	EA	6	1	2	4	1	2	4	48	30	27	4
P 0	9905-205-2794	REFLECTOR, RED MS35387-1 (96906)	EA	4	1	1	3	1	1	3	32	20	27	5
X2 0		BLOCK ASSEMBLY: wheel chock D35533 (80328)	EA	2									27	6
P 0	2610-262-8653	TIRE, PNEUMATIC MS35388-21 (96906)	EA	8	1	1	2	1	1	2	24	16	27	7
P 0	2610-051-9450	INNER TUBE MS35392-15 (96906)	EA	8	1	1	2	1	1	2	24	16	27	8
X2 0		WHEEL MS53044-6 (96906)	EA	8									27	9
X2 0		TIE DOWN RING NAS1251A25-16 (80205)	EA	10									27	10
X1		TRAILER FRAME D35515 (80328)	EA	1									27	11
P 0	5310-984-3806	NUT, PLAIN, HEXAGON: splash guard mtg, 5/16-18 thd size MS51922-9 (96906)	EA	8	*	*	*	*	*	*	*	*	28	1

(1) SMR CODE	(2) FEDERAL STOCK NUMBER	(3) DESCRIPTION REF NUMBER & MFR CODE	USABLE ON CODE	(4) UNIT OF MEAS	(5) QTY INC IN UNIT	(6) 30-DAY DS MAINT ALLOWANCE (a) 1-20	(b) 21-50	(c) 51-100	(7) 30-DAY GS MAINT ALLOWANCE (a) 1-20	(b) 21-50	(c) 51-100	(8) 1-YR ALW PER 100 EQUIP CNTGY	(9) DEPOT MAINT ALW PER 100 EQUIP	(10) ILLUSTRATION (a) FIG. NO.	(b) ITEM NO.
P O	5306-225-9081	BOLT, MACHINE: splash guard mtg, 5/16-18 thd size, 1 1/4 in. lg MS90725-36 (96906)		EA	8	*	*	*	*	*	*	*	*	28	2
X2 O		STRIP, BACKING: splash guard SU02-098 (80328)		EA	2									28	3
P O	2540-860-0575	GUARD, SPLASH MS51331-3 (96906)		EA	2	1	1	2	1	1	2	24	16	28	4
P O	5305-855-0966	SCREW, TAPPING: clearance light mtg, No. 8-32 thd size, 7/8 in. lg MS24629-39 (96906)		EA	84	*	*	*	*	*	*	*	*	29	1
P O	6220-577-3435	LIGHT, CLEARANCE: blackout, amber MS35424-1 (96906)		EA	4	*	1	1	*	1	1	16	12	29	2
P O	6240-019-0877	LAMP, INCANDESCENT MS15570-1251 (96906)		EA	4	4	8	17	4	8	17	200	180	29	3
P O	6220-729-9296	LENS, AMBER MS35420-1 (96906)		EA	4	*	1	1	*	1	1	16	12	29	4
X2 O		LAMPHOLDER MS35422-1 (96906)		EA	4									29	5
P O	6220-577-3434	LIGHT, CLEARANCE: amber MS35423-1 (96906)		EA	6	1	1	2	1	1	2	24	18	29	2
P O	6240-019-0877	LAMP, INCANDESCENT MS15570-1251 (96906)		EA	6	REF	REF	REF	REF	REF	REF	REF	REF	29	3
P O	6220-299-7425	LENS, AMBER MS35421-1 (96906)		EA	6	1	1	2	1	1	2	24	18	29	4
X2 O		LAMPHOLDER MS35422-1 (96906)		EA	6									29	5
P O	6220-726-1916	LIGHT, CLEARANCE: red MS35423-2 (96906)		EA	7	1	1	2	1	1	2	28	21	29	2
P O	6240-019-0877	LAMP, INCANDESCENT MS15570-1251 (96906)		EA	7	REF	REF	REF	REF	REF	REF	REF	REF	29	3
P O	6220-299-7426	LENS, RED MS35421-2 (96906)		EA	7	1	1	2	1	1	2	28	21	29	4
X2 O		LAMPHOLDER MS35422-1 (96906)		EA	7									29	5
P O	6220-727-3288	LIGHT, CLEARANCE: blackout, red MS35424-2 (96906)		EA	4	*	1	1	*	1	1	16	12	29	2
P O	6240-019-0877	LAMP, INCANDESCENT MS15770-1251 (96906)		EA	4	REF	REF	REF	REF	REF	REF	REF	REF	29	3
P O	6220-752-5993	LENS, RED MS35420-2 (96906)		EA	4	*	1	1	*	1	1	16	12	29	4
X2 O		LAMPHOLDER MS35422-1 (96906)		EA	4									29	5
P O	5305-855-0966	SCREW, TAPPING: light mtg MS24629-39 (96906)		EA	6	*	*	*	*	*	*	*	*	30	1
P O		LIGHT, STOP AND TAIL 50186 (71951)		EA	2	*	1	1	*	1	1	12	10	30	-
P O		LENS, RED 42012 (71951)		EA	2	*	1	1	*	1	1	12	10	30	2
P O	6240-877-3405	LAMP, INCANDESCENT 1662 (08108)		EA	2	*	1	2	*	1	2	20	16	30	3
X2 O		CONNECTOR, PLUG 46087 (71951)		EA	4									30	4
X2 O		WASHER, ASSEMBLY 43546 (71951)		EA	2									30	5

(1) SMR CODE	(2) FEDERAL STOCK NUMBER	(3) DESCRIPTION REF NUMBER & MFR CODE / USABLE ON CODE	(4) UNIT OF MEAS	(5) QTY INC IN UNIT	(6) 30-DAY DS MAINT ALLOWANCE (a) 1-20	(b) 21-50	(c) 51-100	(7) 30-DAY GS MAINT ALLOWANCE (a) 1-20	(b) 21-50	(c) 51-100	(8) 1-YR ALW PER 100 EQUIP CNTGY	(9) DEPOT MAINT ALW PER 100 EQUIP	(10) ILLUSTRATION (a) FIG. NO.	(b) ITEM NO.
X2 0		GROMMET 48001 (71951)	EA	2									30	6
X2 0		WIRE, LIGHT: 12 gage 45002 (71951)	EA	4									30	7
X2 0		SCREW, SHEET METAL: light, No.6 x 1/2 in. lg 44006 (71951)	EA	2									30	8
X2 0		LAMPHOLDER 51023 (71951)	EA	2									30	9
X2 0		EYELET: screw hole, 7/32 in. dia. 45751 (71951)	EA	6									30	10
X2 0		STRAP, GROUND 30736 (71951)	EA	2									30	11
X1		BODY 47202 (71951)	EA	2									30	12
P 0	5305-984-5688	SCREW, CAP, HEXAGON HEAD: light mtg MS35206-308 (96906)	EA	4	*	*	*	*	*	*	*	*	31	1
P 0	5310-999-7643	WASHER, LOCK: light mtg MS122034 (96906)	EA	4	*	*	*	*	*	*	*	*	31	2
P 0	6220-337-6471	STOPLIGHT-TAILLIGHT BLACKOUT MS51330-1 (96906)	EA	2	*	1	1	*	1	1	12	10	31	-
X2 0		SCREW, MACHINE: door mtg 7320641 (19207)	EA	12									31	3
X2 0		RING, RETAINING: door screw 5936190 (73331)	EA	12									31	4
X2 0		DOOR ASSEMBLY, LIGHT 7526018 (73331)	EA	2									31	5
X2 0		GASKET: door mtg 7320658 (73331)	EA	2									31	6
P 0	6240-710-2742	LAMP, INCANDESCENT: light MS15570 (96906)	EA	4	1	2	3	1	2	3	40	32	31	7
X1		BODY 7525997 (73331)	EA	2									31	8
P 0	5310-088-1251	NUT, PLAIN, HEXAGON: receptacle mtg, 1/4-20 thd size MS51922-1 (96906)	EA	8	*	*	*	*	*	*	*	*	32	1
P 0	5305-988-1727	SCREW, MACHINE: receptacle mtg, 1/4-20 thd size, 1 in. lg MS35206-283 (96906)	EA	8	*	*	*	*	*	*	*	*	32	2
X2 0		COVER, CONNECTOR 298618 (23705)	EA	2									32	3
X2 0		CONNECTOR, RECEPTACLE, PIN: front MS75021-1 (96906)	EA	1									32	4
X2 0		CONNECTOR, RECEPTACLE: rear MS75021-2 (96906)	EA	1									32	4
P 0	5305-984-6211	SCREW, MACHINE: junction box cover mtg, No. 10-24 thd size, 5/8 in. lg MS35206-264 (96906)	EA	4	*	*	*	*	*	*	*	*	33	1
X2 0		COVER, JUNCTION BOX B0-97-272 (80328)	EA	1									33	2
P 0	5310-965-1763	NUT, PLAIN, HEXAGON: terminal board and circuit breaker mtg, No. 10-32 thd size MS20341-10S (96906)	EA	8	*	*	*	*	*	*	*	*	33	3
P 0	5305-993-1851	SCREW, MACHINE: terminal board mtg, No. 10-32 thd size, 1 in. lg MS35207-267 (96906)	EA	2	*	*	*	*	*	*	*	*	33	4

(1) SMR CODE	(2) FEDERAL STOCK NUMBER	(3) DESCRIPTION REF NUMBER & MFR CODE	USABLE ON CODE	(4) UNIT OF MEAS	(5) QTY INC IN UNIT	(6) 30-DAY DS MAINT ALLOWANCE (a) 1-20	(b) 21-50	(c) 51-100	(7) 30-DAY GS MAINT ALLOWANCE (a) 1-20	(b) 21-50	(c) 51-100	(8) 1-YR ALW PER 100 EQUIP CNTGY	(9) DEPOT MAINT ALW PER 100 EQUIP	(10) ILLUSTRATION (a) FIG. NO.	(b) ITEM NO.
P 0	5305-059-3664	SCREW, MACHINE: circuit breaker mtg, No. 10-32 thd size, 1 1/4 in. lg MS51958-68 (96906)		EA	6	*	*	*	*	*	*	*	*	33	5
X2 0		TERMINAL BOARD 47A1838 (01364)		EA	1									33	6
P 0	5925-803-4424	CIRCUIT BREAKER MS39062-2 (96906)		EA	3	*	1	2	*	1	2	18	12	33	7
X2 0		GROMMET, RUBBER: junction box MS35489-42 (96906)		EA	2									33	8
X2 0		PINTLE HOOK 760-1 (74410)		EA	1									34	-
X2 0		PIN, COTTER: mounting nut, 1/4 in. dia, 3 in. lg 773 (74410)		EA	1									34	1
X2 0		NUT, CASTELLATED, HEXAGON: pintle mtg, 1 1/2-12 thd size 771 (74410)		EA	1									34	2
X2 0		SCREW, DRIVE: chain mtg 128 (74410)		EA	1									34	3
X2 0		PIN, COTTER: locking, 1/4 in. dia, 3 1/2 in. lg 770-1 (74410)		EA	1									34	4
X2 0		LINK, CHAIN 127 (74410)		EA	1									34	5
X2 0		CHAIN: locking, pin 196 (74410)		EA	1									34	6
X2 0		PIN, COTTER: nut retaining, 1/8 in. dia, 1 1/2 in. lg 119-1 (74410)		EA	1									34	7
X2 0		NUT, CASTELLATED, HEXAGON: pintle bolt, 1-14 thd size 120-2 (74410)		EA	1									34	8
X2 0		FITTING, LUBRICATION: bolt and latch pin 767 (74410)		EA	2									34	9
X2 0		BOLT, MACHINE: pintle 766 (74410)		EA	1									34	10
X1		PINTLE 761 (74410)		EA	1									34	11
X2 0		PIN, LATCH 765 (74410)		EA	1									34	12
X2 0		LATCH, PINTLE 762 (74410)		EA	1									34	13
X2 0		SPRING, HELICAL: latch 78 (74410)		EA	1									34	14
X2 0		LOCK 764 (74410)		EA	1									34	15
X2 0		PIN ASSEMBLY: towing RS91-440 (80328)		EA	2									34	16
X2 0		PIN, ASSEMBLY: retaining RS91-444 (80328)		EA	2									34	17
P 0	4730-595-0083	COUPLING, AUTOMOTIVE, AIR BRAKE MS35746-1 (96906)		EA	4	*	1	1	*	1	1	16	12	35	1
P 0	4730-196-1504	NIPPLE, PIPE: coupling, 1/2 in. NPT WWN351TYPE1 (81348)		EA	2	*	*	*	*	*	*	*	*	35	2

(1) SMR CODE	(2) FEDERAL STOCK NUMBER	(3) DESCRIPTION REF NUMBER & MFR CODE	USABLE ON CODE	(4) UNIT OF MEAS	(5) QTY INC IN UNIT	(6) 30-DAY DS MAINT ALLOWANCE (a) 1-20	(b) 21-50	(c) 51-100	(7) 30-DAY GS MAINT ALLOWANCE (a) 1-20	(b) 21-50	(c) 51-100	(8) 1-YR ALW PER 100 EQUIP CNTGY	(9) DEPOT MAINT ALW PER 100 EQUIP	(10) ILLUSTRATION (a) FIG. NO.	(b) ITEM NO.
X2 O		VALVE, GATE 217799 (06853)		EA	2									35	3
X2 O		NIPPLE ASSEMBLY 10311 (98343)		EA	4									35	4
X2 O		CONNECTOR, HOSE 215540 (06853)		EA	32									35	5
X2 O		HOSE, AIR BRAKE 2550-6 (00624)		FT	115									35	6
X2 O		NIPPLE, PIPE: brake hose, 1/4 in. NPT MS51953-25 (96906)		EA	21									35	7
X2 O		TEE, PIPE: brake hose, 1/4 in. NPT FIG1664X1-4 (80996)		EA	7									35	8
X2 O		GROMMET, RUBBER MS35489-123 (96906)		EA	50									35	9
X2 O		PLUG, PIPE: air tank, 3/4 in. NPT 204514 (06853)		EA	2									35	10
P O	5310-982-4908	NUT, PLAIN, HEXAGON: air tank mtg, 3/8-24 thd size MS21045-6 (96906)		EA	12	*	*	*	*	*	*	*	*	35	11
P O	5310-080-6004	WASHER, FLAT: air tank mtg, 3/8 in. screw size MS27183-14 (96906)		EA	12	*	*	*	*	*	*	*	*	35	12
P O	5305-269-2808	SCREW, CAP, HEXAGON HEAD: air tank mtg, 3/8-24 thd size, 1 3/4 in. lg MS90726-65 (96906)		EA	12	*	*	*	*	*	*	*	*	35	13
X2 O		GROMMET, RUBBER: tank mtg MS35489-11 (96906)		EA	24									35	14
X2 O		TANK, AIR: brake N3198AA (06721)		EA	3									36	1
P O		VALVE, DRAIN 121565-048 (98343)		EA	3	*	1	2	*	1	2	18	15	36	2
P2 OS		VALVE, RELAY MS53004-1 (96906)		EA	1	*	*	*	*	*	*	5	*	36	3
P2 FS		BRAKE CHAMBER ASSEMBLY 11784B (98343)		EA	4	*	*	*	*	*	*	5	*	36	4
X1		COTTER PIN 194002 (98343)		EA	4									37	1
X1		PIN 194003-5 (98343)		EA	4									37	2
X2 F		NUT, PLAIN, HEXAGON: chamber mtg, 5/8-18 thd size 193009 (98343)		EA	8									37	3
X2 F		WASHER, LOCK: chamber mtg, 5/8 in. screw size 193008 (98343)		EA	4									37	4
X1		YOKE 194001A5 (98343)		EA	4									37	5
X1		JAM NUT 193012 (98343)		EA	4									37	6
X2 F		NUT, PLAIN, HEXAGON: chamber clamp, 3/8-24 thd size S225831 (98343)		EA	8									37	7
X2 F		WASHER, FLAT: chamber clamp, 3/8 in. screw size 194010 (98343)		EA	8									37	8

(1) SMR CODE	(2) FEDERAL STOCK NUMBER	(3) DESCRIPTION REF NUMBER & MFR CODE	USABLE ON CODE	(4) UNIT OF MEAS	(5) QTY INC IN UNIT	(6) 30-DAY DS MAINT ALLOWANCE (a) 1-20	(b) 21-50	(c) 51-100	(7) 30-DAY GS MAINT ALLOWANCE (a) 1-20	(b) 21-50	(c) 51-100	(8) 1-YR ALW PER 100 EQUIP CNTGY	(9) DEPOT MAINT ALW PER 100 EQUIP	(10) ILLUSTRATION (a) FIG. NO.	(b) ITEM NO.
X2 F		BOLT, CARRIAGE: chamber clamp, 3/8-24 thd size, 2 in. lg 193003 (98343)		EA	8									37	9
X1		CLAMP BAND 193013 (98343)		EA	8									37	10
X1		HOUSING 193205A (98343)		EA	4									37	11
X1		SPRING 193207 (98343)		EA	4									37	12
X1		PUSH ROD 193206 (98343)		EA	4									37	13
X1		DIAPHRAGM 1830 (98343) (Component of KIT, FSN 2530-115-3944)		EA	4									37	14
X1		SCREW 175149 (98343) (Component of KIT, FSN 2530-115-3944)		EA	4									37	15
X1		PLUNGER 175113 (98343) (Component of KIT, FSN 2530-115-3944)		EA	4									37	16
X1		SPRING 175176 (98343) (Component of KIT, FSN 2530-115-3944)		EA	4									37	17
X1		RING 1175314B (98343) (Component of KIT, FSN 2530-115-3944)		EA	4									37	18
X1		RING 1175314 (98343) (Component of KIT, FSN 2530-115-3944)		EA	4									37	19
X1		SNAP RING 175175 (98343)		EA	4									37	20
X2 F		RIVET: handle 177606 (98343)		EA	8									37	21
X1		SPRING 177604 (98343)		EA	8									37	22
X1		HANDLE 177602A (98343)		EA	4									37	23
X1		HANDLE 177602 (98343)		EA	4									37	24
X1		CROSS BAR 177607 (98343)		EA	4									37	25
X1		PIN 175181 (98343) (Component of KIT, FSN 2530-115-3944)		EA	4									37	26
X1		NUT 175180 (98343) (Component of KIT, FSN 2530-115-3944)		EA	4									37	27
X1		SEAL 1175309 (98343)		EA	4									37	28
X1		COVER 1178455B (98343)		EA	4									37	29
X1		SEAL 1175317 (98343)		EA	4									37	30
X1		SPRING 175322 (98343)		EA	4									37	31
X1		NUT 175186 (98343)		EA	4									37	32

(1) SMR CODE	(2) FEDERAL STOCK NUMBER	(3) DESCRIPTION REF NUMBER & MFR CODE / USABLE ON CODE	(4) UNIT OF MEAS	(5) QTY INC IN UNIT	(6) 30-DAY DS MAINT ALLOWANCE (a) 1-20	(b) 21-50	(c) 51-100	(7) 30-DAY GS MAINT ALLOWANCE (a) 1-20	(b) 21-50	(c) 51-100	(8) 1-YR ALW PER 100 EQUIP CNTGY	(9) DEPOT MAINT ALW PER 100 EQUIP	(10) ILLUSTRATION (a) FIG. NO.	(b) ITEM NO.
X1		WASHER 175190 (98343)	EA	4									37	33
X1		RING 175377 (98343) (Component of KIT, FSN 2530-115-3944 and P/N 1175450 (98343)	EA	4									37	34
X1		SEAL RING 175315A (98343) (Component of KIT, FSN 2530-115-3944 and P/N 1175450 (98343)	EA	4									37	35
X1		PISTON 175387 (98343)	EA	4									37	36
X1		"O" RING 155105 (98343) (Component of KIT, FSN 2530-115-3944)	EA	4									37	37
X1		RELEASE BOLT 1175382 (98343)	EA	4									37	38
X1		SHAFT 175388 (98343)	EA	4									37	39
X1		SCREW 175129 (98343) (Component of KIT, FSN 2530-115-3944 and FSN 2530-835-4452)	EA	16									37	40
X1		CAP 175128-1 (98343) (Component of KIT, FSN 2530-835-4452)	EA	4									37	41
X1		"O"RING 1175126 (98343) (Component of KIT, FSN 2530-115-3944 and FSN 2530-835-4452)	EA	4									37	42
X1		BUSHING 1175128 (98343) (Component of KIT, FSN 2530-115-3944 and FSN 2530-835-4452)	EA	4									37	43
X1		SEAL 175125 (98343) (Component of KIT, FSN 2530-115-3944 and, FSN 2530-835 4452)	EA	4									37	44
X1		PLUG 143933 (98343)	EA	8									37	45
X1		SCREW S121940 (98343)	EA	8									37	46
X1		SCREW S121954 (98343)	EA	8									37	47
X2 F		SCREW, CAP, HEXAGON HEAD: cap mtg, 1/4-20 thd size, 7/8 in. lg S121893 (98343)	EA	8									37	48
X2 F		WASHER, LOCK: cap mtg, 1/4 in. screw size S120380 (98343)	EA	24									37	49
X1		SEAL 1175313 (98343)	EA	4									37	50
X1		SEAL 1175318 (98343)	EA	4									37	51
X1		CYLINDER 1175301 (98343)	EA	4									37	52
X1		BOOT 1175308 (98343) (Component of KIT, FSN 1175160 (98343)	EA	4									37	53

(1) SMR CODE	(2) FEDERAL STOCK NUMBER	(3) DESCRIPTION REF NUMBER & MFR CODE	USABLE ON CODE	(4) UNIT OF MEAS	(5) QTY INC IN UNIT	(6) 30-DAY DS MAINT ALLOWANCE (a) 1-20	(b) 21-50	(c) 51-100	(7) 30-DAY GS MAINT ALLOWANCE (a) 1-20	(b) 21-50	(c) 51-100	(8) 1-YR ALW PER 100 EQUIP CNTGY	(9) DEPOT MAINT ALW PER 100 EQUIP	(10) ILLUSTRATION (a) FIG. NO.	(b) ITEM NO.
X1		SNAP RING 166066 (98343) (Component of KIT, 1175160)		EA	4									37	54
X1		WASHER 1175305 (98343) (Component of KIT, 1175160)		EA	4									37	55
X1		SCREEN STRAINER 166013 (98343)		EA	4									37	56
X1		SPRING 1175307 (98343) (Component of KIT, 1175160)		EA	4									37	57
X1		VALVE SEAL 1175399 (98343)		EA	4									37	58
X1		BALL 322005 (98343) (Component of KIT, 1175160)		EA	4									37	59
X1		CAP 1175304 (98343)		EA	4									37	60
X1		SEAL 1175315 (98343)		EA	4									37	61
X1		DIAPHRAGM 160204 (98343)		EA	4									37	62
X1		BODY 1175303 (98343)		EA	4									37	63
X2 O		CLIP, CONNECTOR HOLDER 8742391 (19207)		EA	1									38	1
X2 O		CLIP, CONNECTOR HOLDER 10900665 (19207)		EA	14									38	2
X2 O		WIRING HARNESS D35527 (80328)		EA	1									38	-
X2 O		CONNECTOR, PLUG, SOCKET MS27144-1 (96906)		EA	35									38	3
X2 O		TERMINAL, LUG 7056700 (19207)		EA	6									38	4
X2 O		WIRE, ELECTRICAL M13486-1-5 (81348)		FT	250									38	5
X2 F		AXLE ASSEMBLY: trailer 19030 (56697)		EA	2									-	-
X2 O		HUB AND DRUM ASSEMBLY: wheel 3991207 (56697)		EA	4									39	-
X2 O		NUT, LUG: right hand, 1 1/8-16 thd size 37891 (09386)		EA	20									39	1
X2 O		NUT, LUG: left hand, 1 1/8-16 thd size 37892 (09386)		EA	20									39	1
X2 O		CAP NUT: right hand 10708 (09386)		EA	20									39	2
X2 O		CAP NUT: left hand 10709 (09386)		EA	20									39	2
X2 O		BOLT, HUB CAP: 5/16-18 thd size, 1/2 in. lg 400128 (56697)		EA	24									39	3
X2 O		WASHER, LOCK: hub cap, 5/16 in. screw size 403115 (56697)		EA	24									39	4

(1) SMR CODE	(2) FEDERAL STOCK NUMBER	(3) DESCRIPTION REF NUMBER & MFR CODE	USABLE ON CODE	(4) UNIT OF MEAS	(5) QTY INC IN UNIT	(6) 30-DAY DS MAINT ALLOWANCE (a) 1-20	(b) 21-50	(c) 51-100	(7) 30-DAY GS MAINT ALLOWANCE (a) 1-20	(b) 21-50	(c) 51-100	(8) 1-YR ALW PER 100 EQUIP CNTGY	(9) DEPOT MAINT ALW PER 100 EQUIP	(10) ILLUSTRATION (a) FIG. NO.	(b) ITEM NO.
X2 0		CAP, HUB 304104 (56697)		EA	4									39	5
P 0	3110-293-8997	BEARING CUP, OUTER HM212011 (60038)		EA	4	*	1	1	*	1	1	12	10	39	6
P 0	3110-100-0335	BEARING CUP, INNER 653 (60038)		EA	4	*	1	1	*	1	1	12	10	39	7
X2 F		NUT, HUB STUD: 3/4-16 thd size 402109 (56697)		EA	40									39	8
X2 F		DRUM, BRAKE 3060301-002 (56697)		EA	4									39	9
X2 F		STUD, HUB: right hand 13988 (09386)		EA	20									39	10
X2 F		STUD, HUB: left hand 13989 (09386)		EA	20									39	10
X2 F		HUB, WHEEL 300126-001 (56697)		EA	4									39	11
X2 F		NUT, PLAIN, HEXAGON: brake mtg, 1/2-20 thd size 402106 (56697)		EA	64									40	1
X2 F		WASHER, LOCK: brake mtg, 1/2 in. screw size 403117 (56697)		EA	64									40	2
X2 F		BOLT, MACHINE: brake mtg, 1/2-20 thd size, 1 5/8 in. lg 401113 (56697)		EA	64									40	3
X2 F		BRAKE ASSEMBLY 299004 (56697)		EA	4									40	-
X2 F		SPRING, RETRACTING 208100 (56697)		EA	4									40	4
X2 F		RING, RETAINING: anchor pin 214100 (56697)		EA	16									40	5
X2 F		WASHER, FLAT: anchor pin 403101 (56697)		EA	16									40	6
X2 F		WASHER, FELT: anchor pin 409100 (56697)		EA	16									40	7
X2 F		PIN, ANCHOR 203100-001 (56697)		EA	8									40	8
P F		SHOE, BRAKE 201999-014 (56697)		EA	8	*	1	1	*	1	1	16	8	40	9
X2 F		SETSCREW: roller pin, 1/4-20 thd size, 3/8 in. lg 400101 (56697)		EA	8									40	10
X2 F		PIN, ROLLER: brake shoe 205100-001 (56697)		EA	8									40	11
X2 F		ROLLER, BRAKE 204100-001 (56697)		EA	8									40	12
X2 F		BUSHING, SLEEVE 405101 (56697)		EA	16									40	13
X2 F		NUT, PLAIN, HEXAGON: brake lining, 3/8-24 thd size 402100 (56697)		EA	64									40	14
X2 F		WASHER, LOCK: brake lining, 3/8 in. screw size 403100 (56697)		EA	64									40	15
X2 F		SCREW, BRAKE LINING: 3/8-24 thd size, 1 in. lg 400102 (56697)		EA	64									40	16

(1) SMR CODE	(2) FEDERAL STOCK NUMBER	(3) DESCRIPTION REF NUMBER & MFR CODE	USABLE ON CODE	(4) UNIT OF MEAS	(5) QTY INC IN UNIT	(6) 30-DAY DS MAINT ALLOWANCE (a) 1-20	(b) 21-50	(c) 51-100	(7) 30-DAY GS MAINT ALLOWANCE (a) 1-20	(b) 21-50	(c) 51-100	(8) 1-YR ALW PER 100 EQUIP CNTGY	(9) DEPOT MAINT ALW PER 100 EQUIP	(10) ILLUSTRATION (a) FIG. NO.	(b) ITEM NO.
P F		LINING, BRAKE SHOE 213113-001 (56697)		EA	16	1	1	3	1	1	3	32	20	40	17
X1		BRAKE SHOE 201110-001 (56697)		EA	8									40	18
X2 F		RING, RETAINING: camshaft 5100-150 (79136)		EA	8									40	19
X2 F		WASHER, FLAT: camshaft 403105 (56697)		EA	4									40	20
X2 F		WASHER, SPACING: camshaft 403108 (56697)		EA	4									40	21
X2 F		CAMSHAFT 202100-205 (56697)		EA	4									40	22
X2 F		BOLT, HEXAGON HEAD: dust shield mtg, 5/16-18 thd size, 1/2 in. lg 400128 (56697)		EA	24									40	23
X2 F		WASHER, LOCK: dust shield mtg, 5/16 in. screw size 403115 (56697)		EA	24									40	24
X2 F		SHIELD, DUST 211102-001 (56697)		EA	4									40	25
X2 F		SPIDER ASSEMBLY: brake 200999-001 (56697)		EA	4									40	26
X2 O		FITTING, LUBRICATION: spider 1613B (95879)		EA	4									40	27
X2 F		NUT, PLAIN, HEXAGON: spider 1/2-20 thd size 402102 (56697)		EA	4									40	28
X2 F		WASHER, LOCK: spider, 1/2 in. screw size 403113 (56697)		EA	4									40	29
X2 F		SCREW, CAP, HEXAGON HEAD: spider, 1/2-20 thd size, 2 1/2 in. lg 401101 (56697)		EA	4									40	30
X2 F		SEAL, SPIDER 408100 (56697)		EA	8									40	31
X2 F		BUSHING, SLEEVE: spider 405106 (56697)		EA	4									40	32
X2 F		SPIDER, BRAKE 200100-001 (56697)		EA	4									40	33
X2 F		BRACKET, CAM 209999-004 (56697)		EA	4									41	1
X1		AXLE BAR ASSEMBLY 199302 (56697)		EA	2									41	2
X2 O		NUT, SPINDLE 103102-001 (56697)		EA	4									41	3
X2 O		WASHER, LOCK 105107 (56697)		EA	4									41	4
X2 O		NUT, SPINDLE 103103-002 (56697)		EA	4									41	5
P O	3110-293-8998	BEARING CONE HM212049 (60038)		EA	4	*	1	1	*	1	1	12	10	41	6
P O	3110-100-0670	BEARING CONE 663 (60038)		EA	4	*	1	1	*	1	1	12	10	41	7
X2 O		RETAINER, GREASE 106999-019 (56697)		EA	4									41	8

(1) SMR CODE	(2) FEDERAL STOCK NUMBER	(3) DESCRIPTION REF NUMBER & MFR CODE	USABLE ON CODE	(4) UNIT OF MEAS	(5) QTY INC IN UNIT	(6) 30-DAY DS MAINT ALLOWANCE (a) 1-20	(b) 21-50	(c) 51-100	(7) 30-DAY GS MAINT ALLOWANCE (a) 1-20	(b) 21-50	(c) 51-100	(8) 1-YR ALW PER 100 EQUIP CNTGY	(9) DEPOT MAINT ALW PER 100 EQUIP	(10) ILLUSTRATION (a) FIG. NO.	(b) ITEM NO.
X2 F		SLACK ADJUSTER 81003 (54713)		EA	4									41	9
X2 F		SUSPENSION SYSTEM H800-36 (92967)		EA	1									42	-
X2 F		NUT, U BOLT: 1 1/8-12 thd size H836 (92967)		EA	8									42	1
X2 F		WASHER, FLAT: U-bolt, 1 3/16 in. id, 2 1/4 in. od, 1/8 in. thk H837B (92967)		EA	8									42	2
X2 F		PLATE, SPRING CLAMP CH820 (92967)		EA	2									42	3
X2 F		U BOLT, TRUNNION HUB H835-1 (92967)		EA	4									42	4
X2 F		BUSHING, RUBBER H833 (92967)		EA	4									42	5
X2 F		NUT, U BOLT: 3/4-16 thd size H841 (92967)		EA	16									42	6
X2 F		WASHER, FLAT: U-bolt, 3/4 in. screw size H817 (92967)		EA	16									42	7
X2 F		WASHER, LOCK: U-bolt, 3/4 in. screw size H843 (92967)		EA	16									42	8
X2 F		NUT, U BOLT: lower, 3/4-16 thd size H842 (92967)		EA	8									42	9
X2 F		U BOLT, SPRING BOX H840-1 (92967)		EA	8									42	10
X2 F		NUT, PLAIN, HEXAGON: spring box, 1-14 thd size H736 (92967)		EA	4									42	11
X2 F		WASHER, LOCK: spring box, 1 in. screw size H774 (92967)		EA	4									42	12
X2 F		SCREW, CAP, HEXAGON HEAD: spring box, 1-14 thd size, 5 in. lg H719 (92967)		EA	4									42	13
X2 F		PLATE, ADJUSTMENT H816 (92967)		EA	4									42	14
X2 F		BOX HALF, SPRING: lower H812 (92967)		EA	4									42	15
X2 F		BOX HALF, SPRING: upper H811 (92967)		EA	4									42	16
X2 F		PAD, RUBBER H813 (92967)		EA	8									42	17
X2 F		PAD, RUBBER H814 (92967)		EA	8									42	18
X2 F		SPRING ASSEMBLY H801 (92967)		EA	2									42	19
X2 F		NUT, PLAIN, HEXAGON: tie rod, 1-14 thd size H736 (92967)		EA	2									42	20
X2 F		WASHER: tie rod, 1 1/16 in. id, 2 1/2 in. od, 1/4 in. thk H227 (92967)		EA	2									42	21
X2 F		CAP, END: trunnion tube H827 (92967)		EA	2									42	22

(1) SMR CODE	(2) FEDERAL STOCK NUMBER	(3) DESCRIPTION REF NUMBER & MFR CODE	USABLE ON CODE	(4) UNIT OF MEAS	(5) QTY INC IN UNIT	(6) 30-DAY DS MAINT ALLOWANCE (a) 1-20	(b) 21-50	(c) 51-100	(7) 30-DAY GS MAINT ALLOWANCE (a) 1-20	(b) 21-50	(c) 51-100	(8) 1-YR ALW PER 100 EQUIP CNTGY	(9) DEPOT MAINT ALW PER 100 EQUIP	(10) ILLUSTRATION (a) FIG. NO.	(b) ITEM NO.
X2 F		TIE ROD H829-1 (92967)		EA	1									42	23
X2 F		TRUNNION, HUB H825 (92967)		EA	2									42	24
X2 F		WASHER, RETAINING: trunnion H834 (92967)		EA	2									42	25
X2 F		NUT, PLAIN, HEXAGON: trunnion hanger H37 (92967)		EA	6									42	26
X2 F		WASHER, LOCK: trunnion hanger, 5/8 in. screw size H229 (92967)		EA	6									42	27
X2 F		SCREW, CAP, HEXAGON HEAD: trunnion hanger H759 (92967)		EA	6									42	28
X2 F		TRUNNION, HANGER H850 (92967)		EA	2									42	29
X2 F		TUBE, TRUNNION H828 (92967)		EA	1									42	30
P O	5310-880-7744	NUT, PLAIN, HEXAGON: crank clamp, 5/16-18 thd size MS51967-5 (96906)		EA	1	*	*	*	*	*	*	*	*	43	1
P O	5310-407-9566	WASHER, LOCK: crank clamp, 5/16 in. screw size MS35338-45 (96906)		EA	1	*	*	*	*	*	*	*	*	43	2
P O	5306-225-8499	BOLT, MACHINE: crank clamp, 5/16 thd size, 1 in. lg MS90725-34 (96906)		EA	1	*	*	*	*	*	*	*	*	43	3
X2 O		CLAMP, CRANK LG06-141 (80328)		EA	1									43	4
X2 O		CRANK, JACK SET 4343 (90914)		EA	1									43	5
P O	5310-877-5795	NUT, PLAIN, HEXAGON: crank clip mtg, No. 10-32 thd size MS21044N8 (96906)		EA	4	*	*	*	*	*	*	*	*	43	6
P O	5305-059-3660	SCREW, MACHINE: crank clip mtg, No. 10-32 thd size, 5/8 in. lg MS51958-64 (96906)		EA	4	*	*	*	*	*	*	*	*	43	7
X2 O		CLIP, CRANK STORAGE B3630 (80328)		EA	2									43	8
P F	5310-225-6408	NUT, PLAIN, HEXAGON: jack set mtg, 5/8-18 thd size MS51922-53 (96906)		EA	4	*	*	*	*	*	*	*	*	43	9
P F	5305-727-5677	SCREW, CAP, HEXAGON HEAD: jack set mtg, 5/8-18 thd size, 1 1/2 in. lg MS90726-162 (96906)		EA	4	*	*	*	*	*	*	*	*	43	10
P F	5310-067-9507	NUT, PLAIN, HEXAGON: jack set mtg, 1/2-20 thd size MS51922-37 (96906)		EA	16	*	*	*	*	*	*	*	*	43	11
P F	5305-761-4227	SCREW, CAP, HEXAGON HEAD: jack set mtg 1/2-20 thd size, 1 1/4 in. lg MS90726-111 (96906)		EA	16	*	*	*	*	*	*	*	*	43	12
P2 F S	2530-845-0385	LANDING GEAR HH500 (90914)		EA	1	*	*	*	*	*	*	5	*	43	-
X2 F		NUT, PLAIN, HEXAGON: connecting shaft and crankshaft mtg, 3/8-24 thd size 08-203587 (90914)		EA	3									43	13
X2 F		WASHER, FLAT: connecting shaft and crank shaft mtg, 3/8 in. screw size 08-203421 (90914)		EA	6									43	14

(1) SMR CODE	(2) FEDERAL STOCK NUMBER	(3) DESCRIPTION REF NUMBER & MFR CODE	USABLE ON CODE	(4) UNIT OF MEAS	(5) QTY INC IN UNIT	(6) 30-DAY DS MAINT ALLOWANCE (a) 1-20	(b) 21-50	(c) 51-100	(7) 30-DAY GS MAINT ALLOWANCE (a) 1-20	(b) 21-50	(c) 51-100	(8) 1-YR ALW PER 100 EQUIP CNTGY	(9) DEPOT MAINT ALW PER 100 EQUIP	(10) ILLUSTRATION (a) FIG. NO.	(b) ITEM NO.
X2 F		SCREW, CAP, HEXAGON HEAD: connecting shaft and crankshaft mtg, 3/8-24 thd size, 2 in. lg 08-203427 (90914)		EA	1									43	15
X2 F		COUPLING, CRANKSHAFT 29-000979 (90914)		EA	1									43	16
X2 F		SHAFT, CRANK, OUTER 29-004491 (90914)		EA	1									43	17
X2 F		SHAFT, CONNECTING 29-004398 (90914)		EA	1									43	18
X2 O		SCREW, MACHINE: cover mtg 08-203234 (90914)		EA	8									43	19
X2 O		COVER, LEG 29-003946 (90914)		EA	2									43	20
X2 F		SCREW, CAP, HEXAGON HEAD: gear cover mtg 08-203242 (90914)		EA	6									43	21
X2 F		COVER, GEAR 29-004182 (90914)		EA	1									43	22
X2 F		PIN, GROOVE: gear mtg, 3/8 in. dia, 1 5/16 in. lg 08-203258 (90914)		EA	1									43	23
X2 F		PIN, GROOVE: gear mtg, 3/8 in. dia, 1-5/16 in. lg 08-203285 (90914)		EA	2									43	24
X2 F		PIN, GROOVE: shaft, 5/16 in. dia, 9/16 in. lg 08-203419 (90914)		EA	4									43	25
X2 F		GEAR, CROSS SHAFT 29-037561 (90914)		EA	2									43	26
X2 F		SHAFT, CROSS: lh 29-004152 (90914)		EA	1									43	27
X2 F		GEAR, TWO-SPEED 29-003841 (90914)		EA	1									43	28
X2 F		GEAR, TWO-SPEED 29-003842 (90914)		EA	1									43	29
X2 F		SHAFT, CROSS: rh 29-004151 (90914)		EA	1									43	30
X2 F		SHAFT, OUTSIDE MOUNT 29-004150 (90914)		EA	1									43	31
X2 F		BUSHING, SHAFT 08-202445 (90914)		EA	6									43	32
X2 F		DETENT ASSEMBLY 29-004181 (90914)		EA	2									43	33
X2 F		NUT, JAM: jack screw, 3/4-16 thd size 08-203429 (90914)		EA	2									43	34
X2 F		WASHER, FLAT: jack screw, 3/4 in. screw size 08-203450 (90914)		EA	2									43	35
X2 F		GEAR, JACKSCREW 29-003764 (90914)		EA	2									43	36
X2 F		BUSHING, JACKSCREW 08-202448 (90914)		EA	2									43	37
X2 O		FITTING, LUBRICATION 08-202235 (90914)		EA	2									43	38

(1) FEDERAL STOCK NUMBER	(3) DESCRIPTION REF NUMBER & MFR CODE	USABLE ON CODE	(4) UNIT OF MEAS	(5) QTY INC IN UNIT	(6) 30-DAY DS MAINT ALLOWANCE (a) 1-20	(b) 21-50	(c) 51-100	(7) 30-DAY GS MAINT ALLOWANCE (a) 1-20	(b) 21-50	(c) 51-100	(8) 1-YR ALW PER 100 EQUIP CNTGY	(9) DEPOT MAINT ALW PER 100 EQUIP	(10) ILLUSTRATION (a) FIG. NO.	(b) ITEM NO.
	LEG, OUTER: left hand 29-040831 (90914)	X2 F	EA	1									43	39
	LEG, OUTER: right hand 29-040832 (90914)	X2 F	EA	1									43	40
	KEY, JACKSCREW 08-203425 (90914)	X2 F	EA	2									43	41
	BEARING, THRUST: jack screw 08-203451 (90914)	X2 F	EA	2									43	42
	WASHER, FLAT: bearing 08-203422 (90914)	X2 F	EA	2									43	43
	JACKSCREW 29-003552 (90914)	X2 F	EA	2									43	44
	NUT, PLAIN, HEXAGON: axle collar mtg, 3/8-24 thd size 08-203587 (90914)	X2 C	EA	2									43	45
5305-269-2800	SCREW, CAP, HEXAGON HEAD: axle collar mtg, 3/8-24 thd size, 5/8 in. lg MS90726-57 (96906)	P C	EA	2	*	*	*	*	*	*	*	*	43	46
	COLLAR, AXLE 29-003711 (90914)	X2 C	EA	2									43	47
	AXLE, SHOE 29-059861 (90914)	X2 C	EA	2									43	48
	SHOE, BASE E29-005977 (90914)	X2 C	EA	2									43	49
	LEG, INNER 29-004084 (90914)	X2 F	EA	2									43	50
	GROUP 07 - KITS AND SETS													
2530-115-3944	KIT, REPAIR, MAJOR: air chamber 1178450 (98343) (Includes KIT, FSN 1175450)	P F	EA	4	1	1	2	1	1	2	24	18		
	4, DIAPHRAGM													
	4, SCREW												37	14
	4, PLUNGER												37	15
	4, SPRING												37	16
	4, RING												37	17
	4, RING												37	18
	4, PIN												37	19
	4, NUT												37	26
	4, "O" RING												37	27
	16, SCREW												37	37
	4,"O" RING												37	40
	4, BUSHING												37	42
	4, SEAL												37	43
	KIT, REPAIR: piston "O" ring 1175450 (98343)	P F	EA	4	1	1	2	1	1	2	24	18	37	44
	4, RING													
	4, SEAL												37	34
													37	35

(1) SMR CODE	(2) FEDERAL STOCK NUMBER	(3) DESCRIPTION REF NUMBER & MFR CODE	USABLE ON CODE	(4) UNIT OF MEAS	(5) QTY INC IN UNIT	(6) 30-DAY DS MAINT ALLOWANCE (a) 1-20	(b) 21-50	(c) 51-100	(7) 30-DAY GS MAINT ALLOWANCE (a) 1-20	(b) 21-50	(c) 51-100	(8) 1-YR ALW PER 100 EQUIP CNTGY	(9) DEPOT MAINT ALW PER 100 EQUIP	(10) ILLUSTRATION (a) FIG. NO.	(b) ITEM NO.
P F	2530-835-4452	KIT, REPAIR, NYLON BUSHING: air chamber 175055 (98343)		EA	4	1	1	2	1	1	2	24	18		
		16, SCREW												37	40
		4, CAP												37	41
		4, "O" RING												37	42
		4, BUSHING												37	43
		4, SEAL												37	44
P F		KIT, REPAIR, VALVE 1175160 (98343)		EA	4	1	1	2	1	1	2	24	18		
		4, BOOT												37	53
		4, SNAP RING												37	54
		4, WASHER												37	55
		4, SPRING												37	57
		4, BALL												37	59

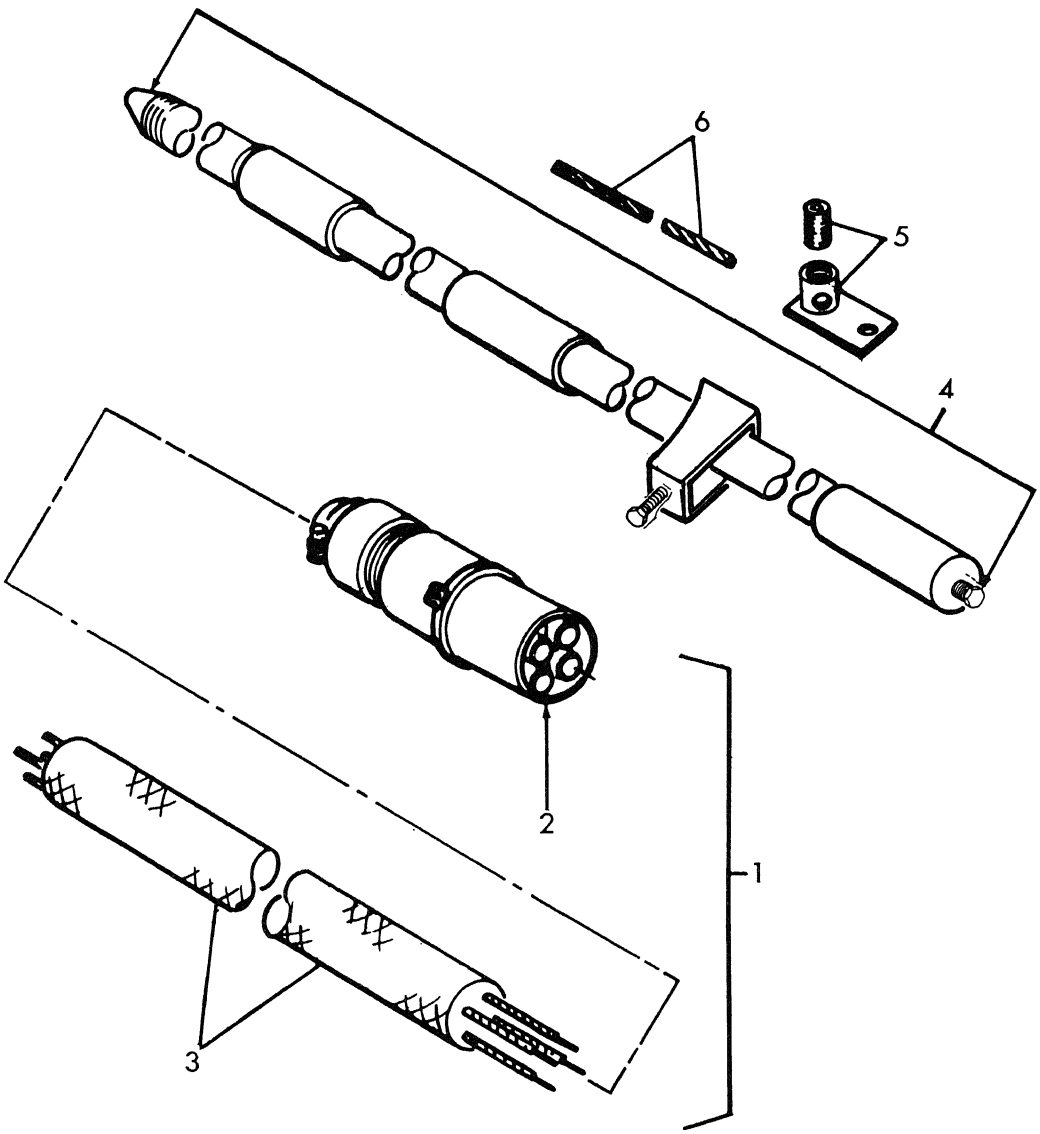

ME 3655-215-25P/1

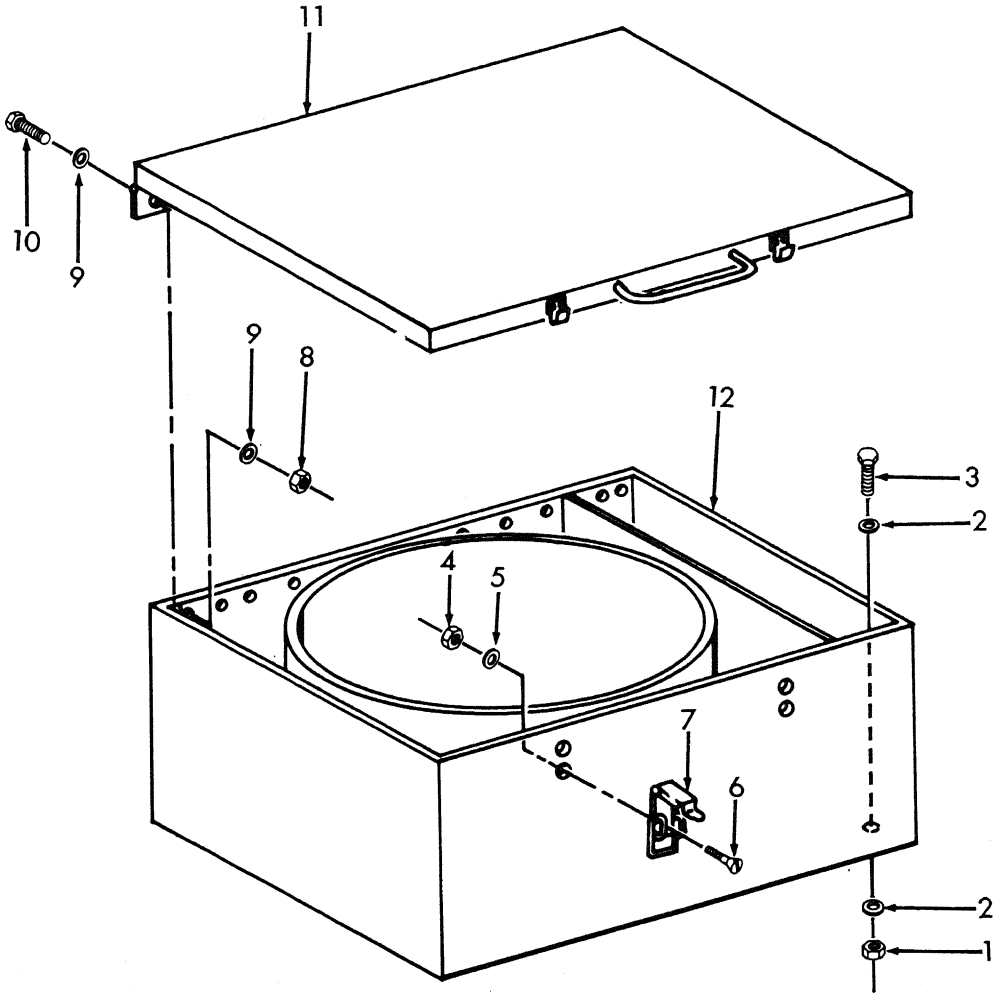

ME 3655-215-25P/2

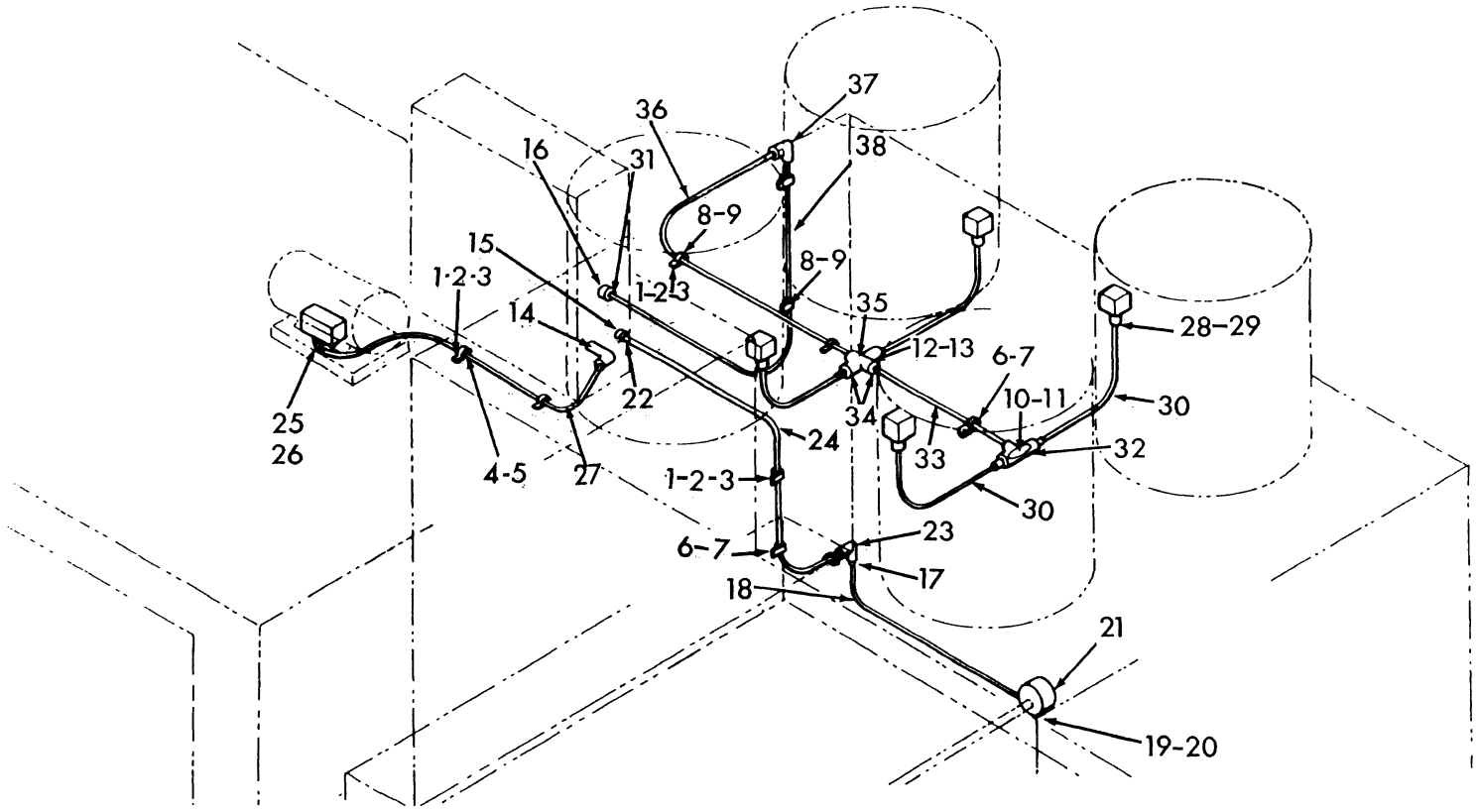

ME 3655-215-25P/3

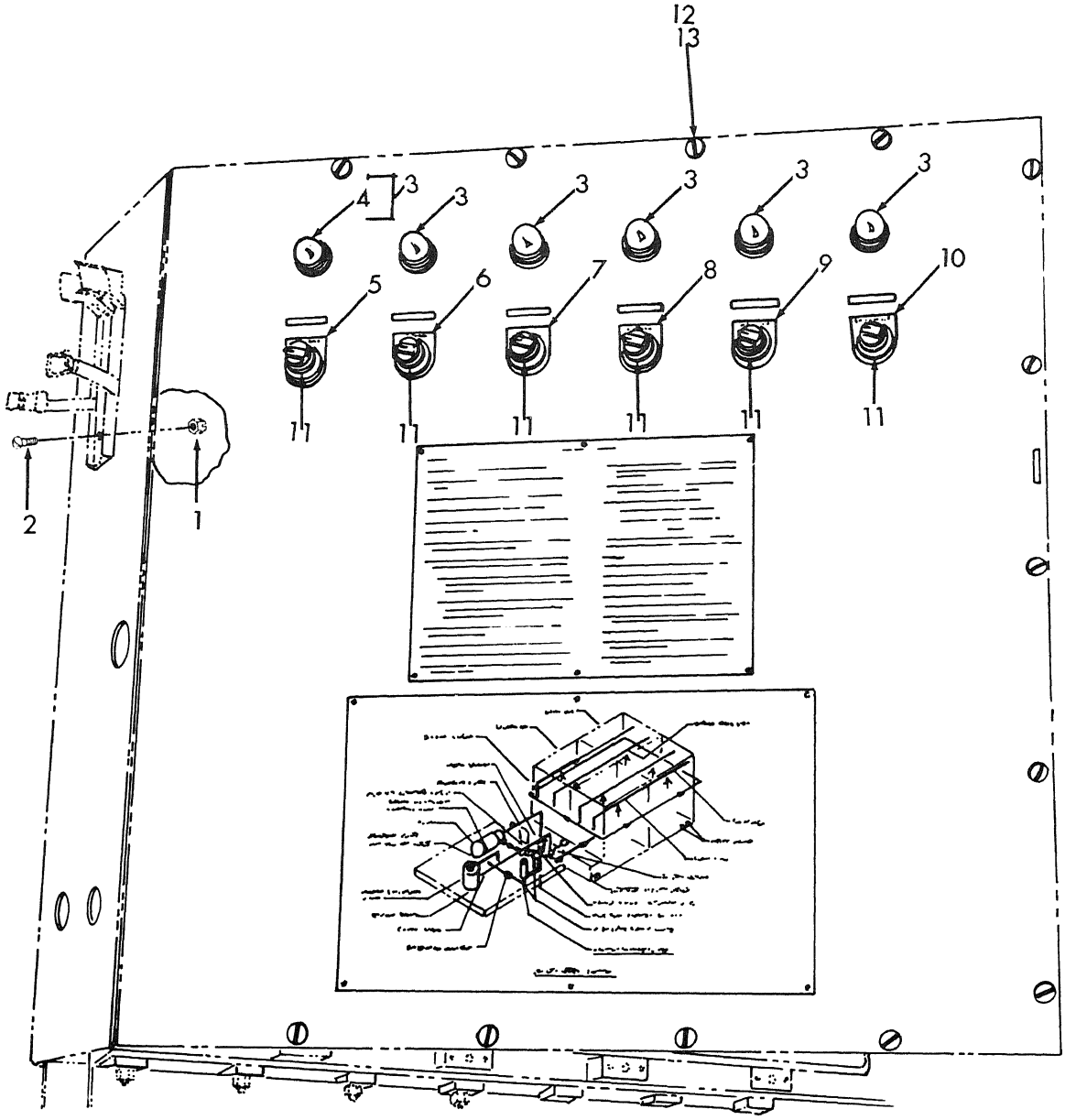

ME 3655-215-25P/

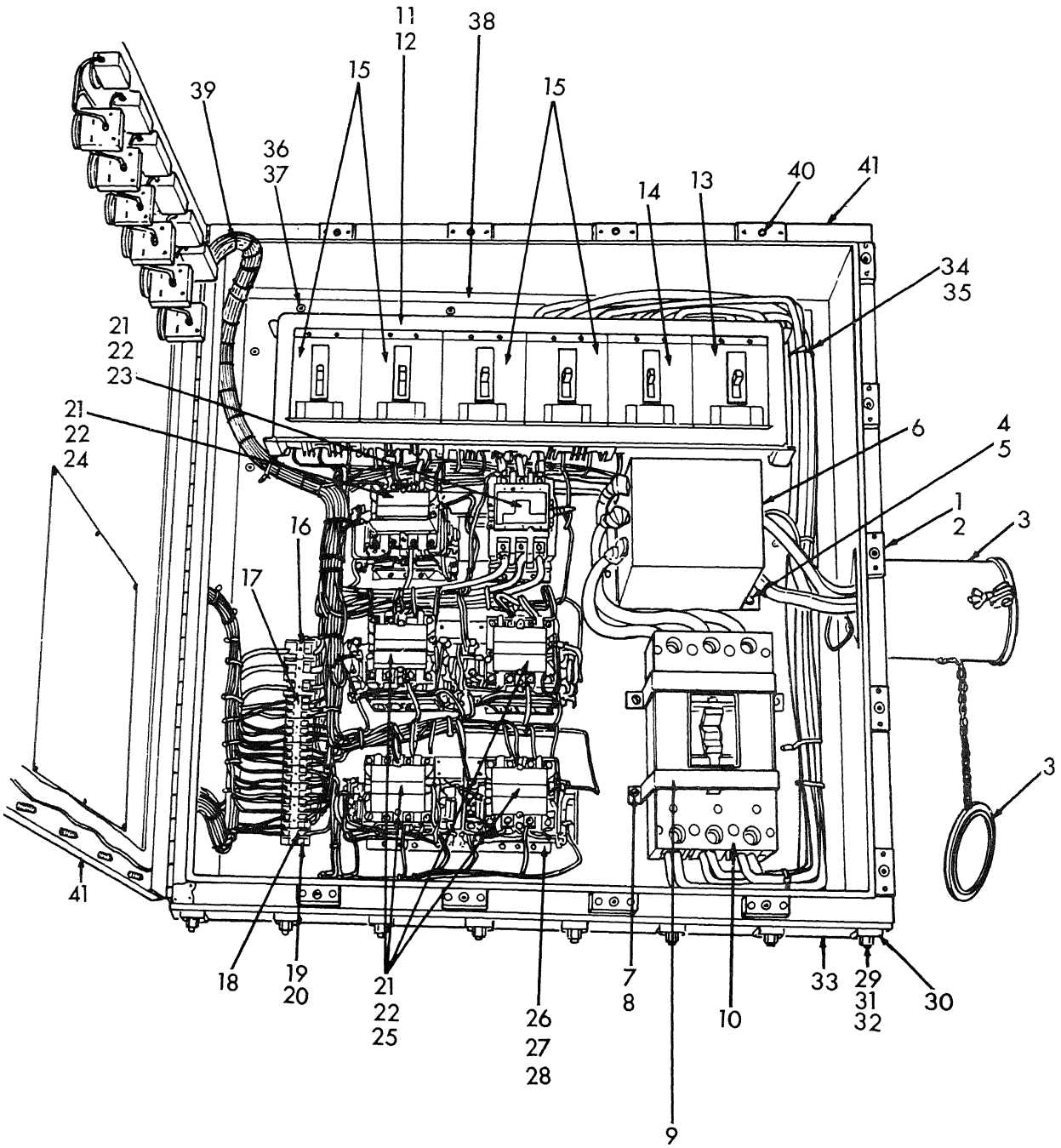

ME 3655-215-25P/5

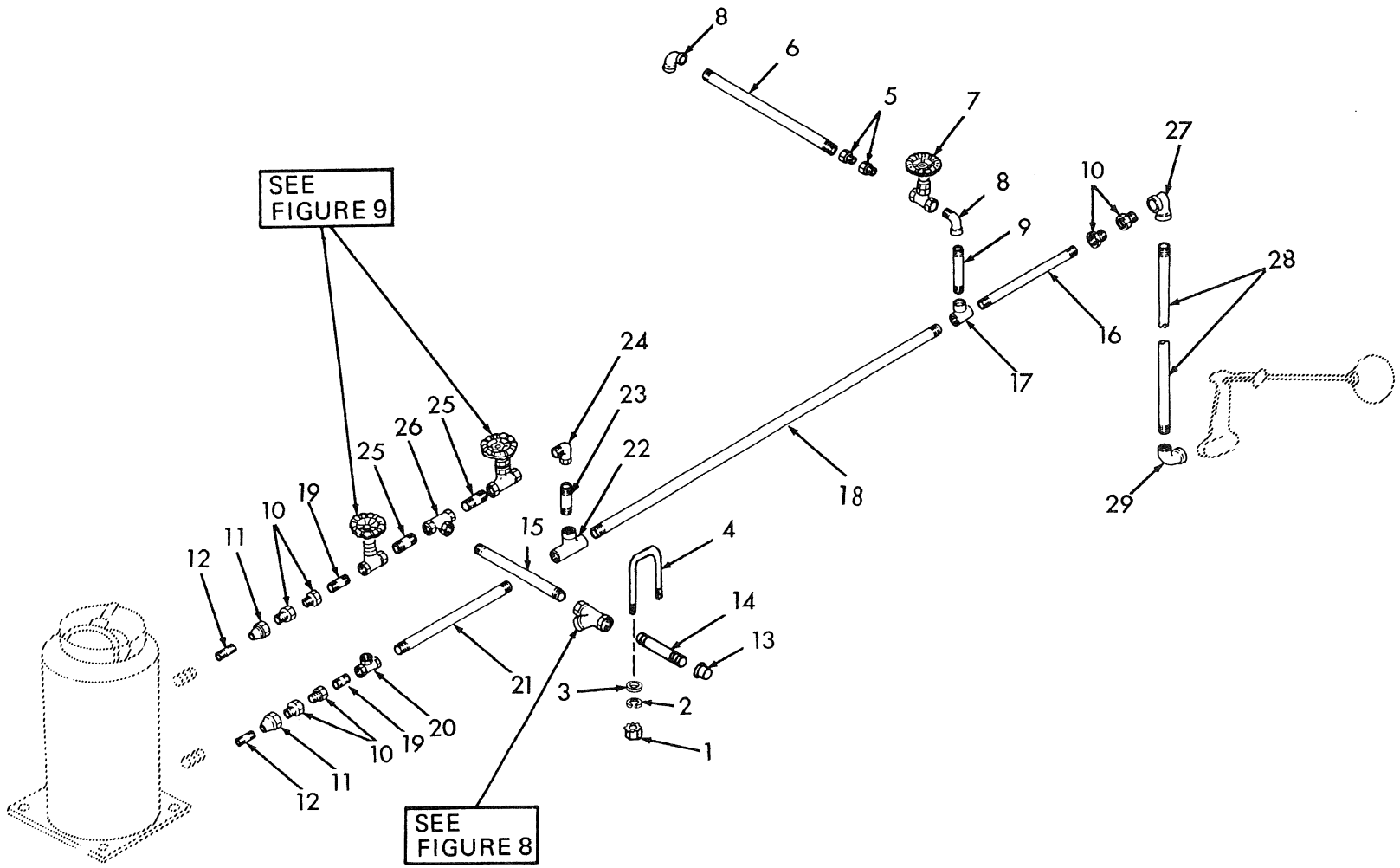
SEE FIGURE 9
SEE FIGURE 8
1
2
3
4
5
6
7
8
9
10
11
12
13
14
15
16
17
18
19
20
21
22
23
24
25
26
27
28
29

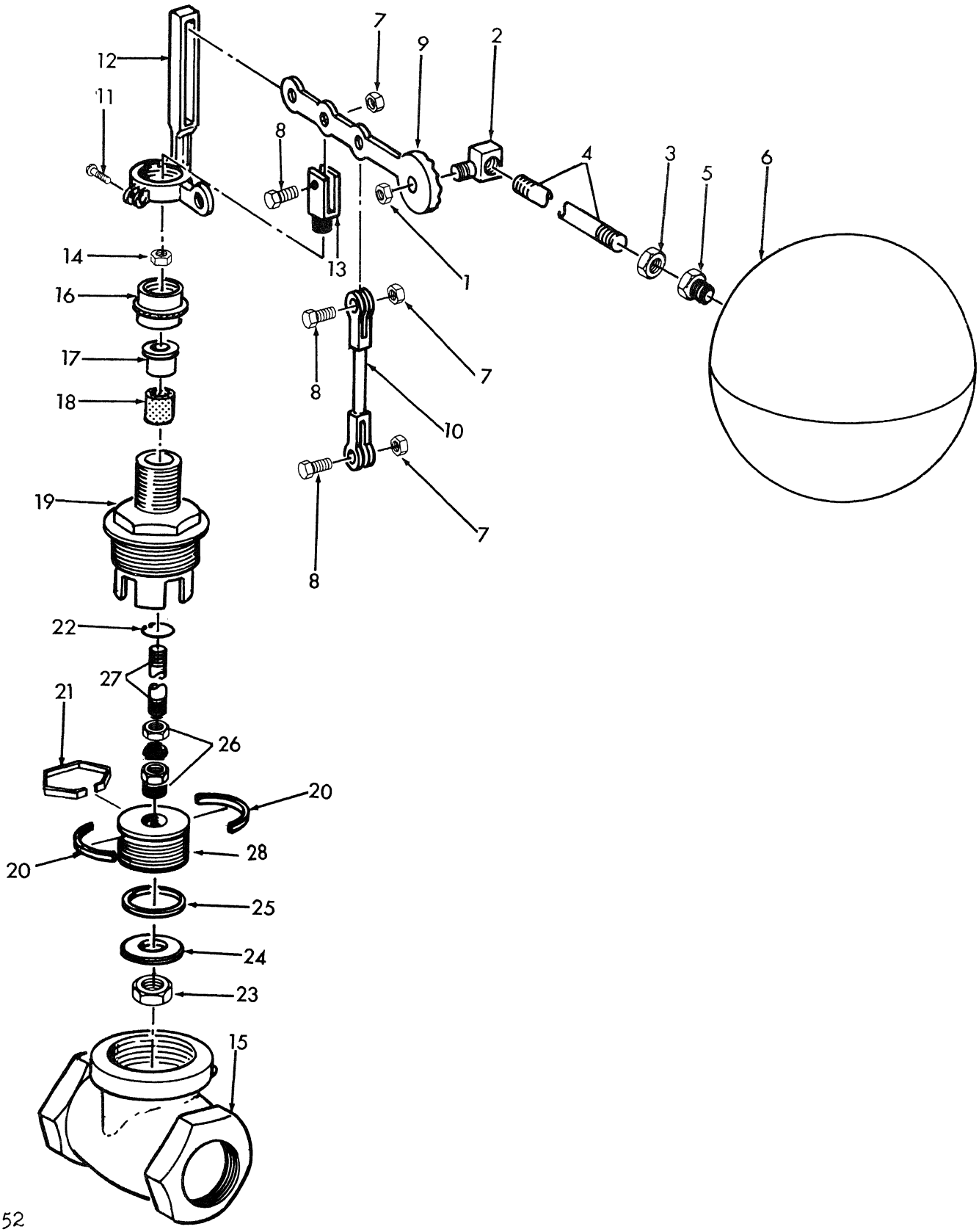
12
11
7
9
2
8
4
3
5
6
14
13
1
16
17
8
7
18
10
19
7
8
22
27
21
26
20
20
28
25
24
23
15

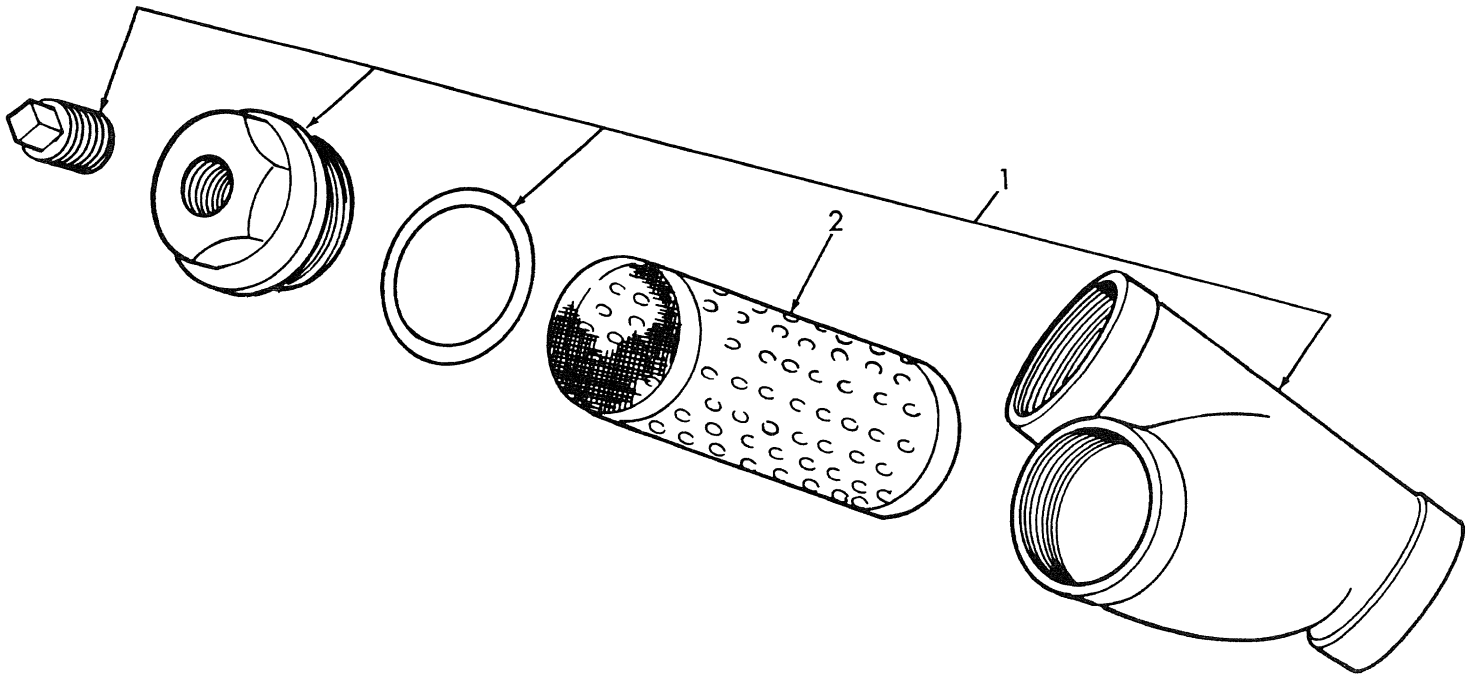

ME 3655-215-25P/8

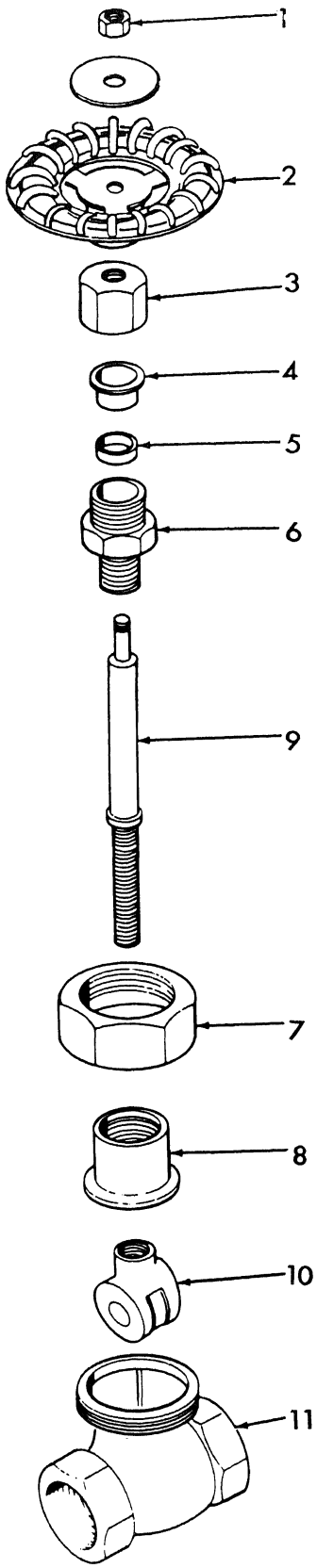
1
2
3
4
5
6
9
7
8
10
11

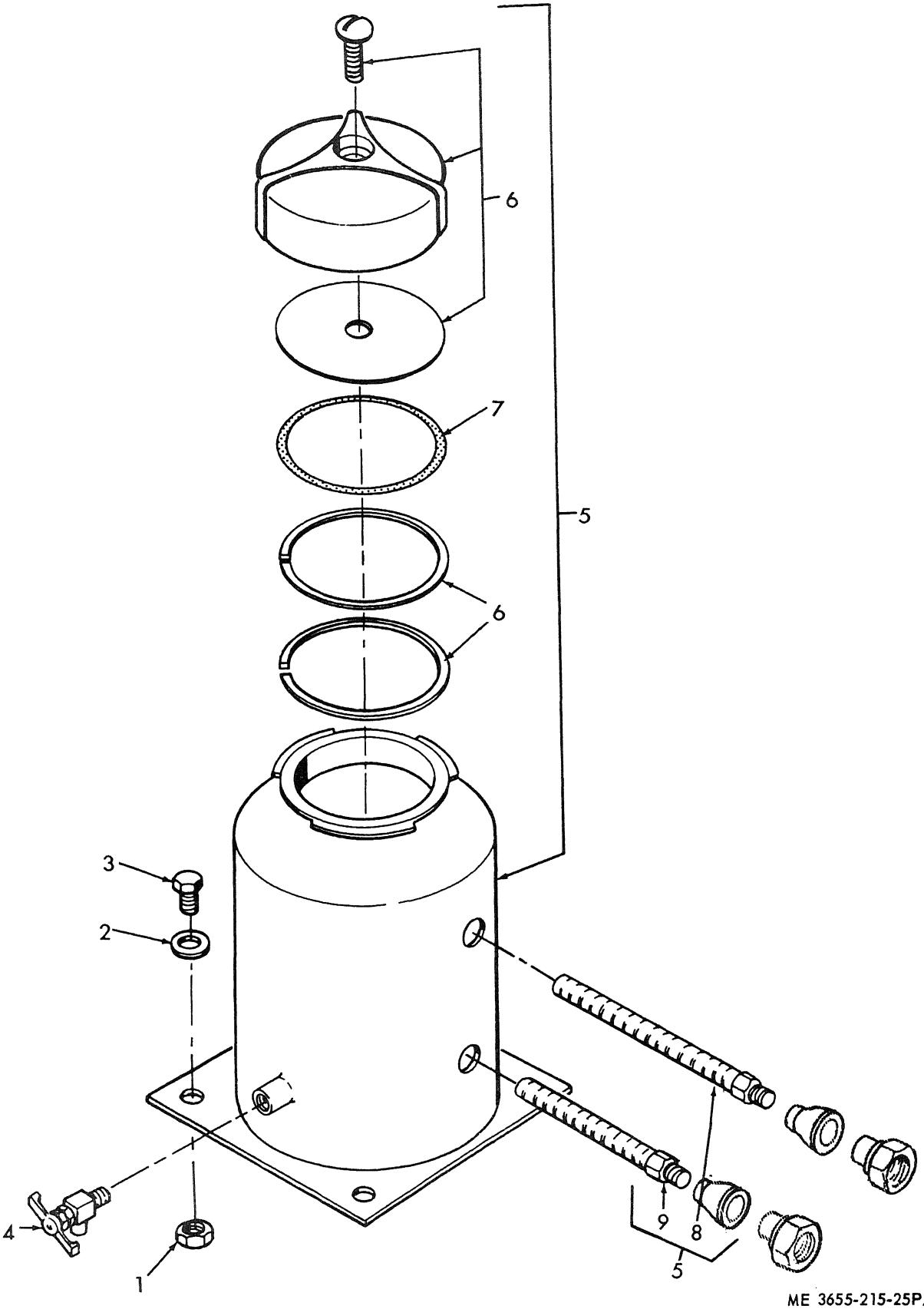

ME 3655-215-25P/10

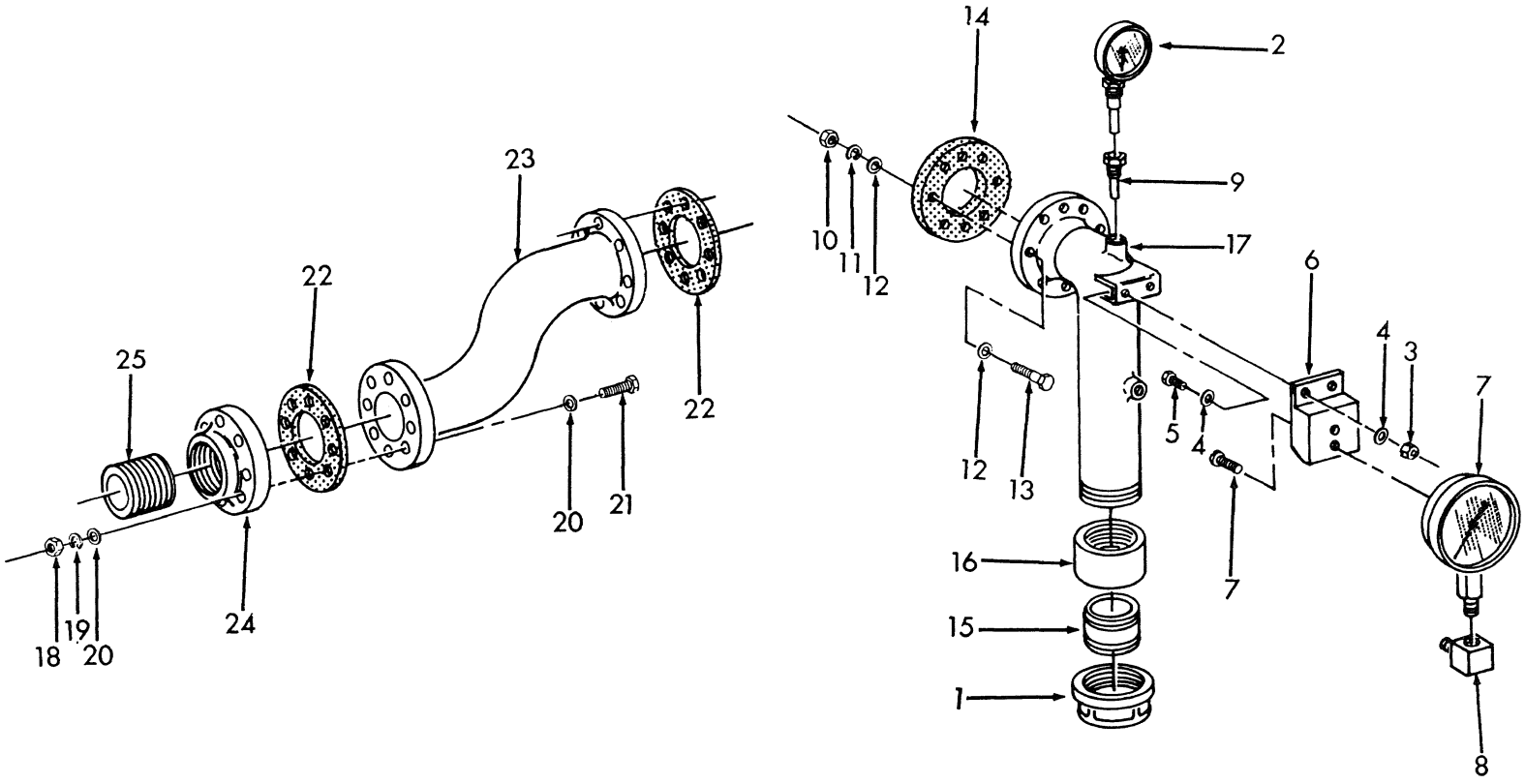

ME 3655-215-25P/11

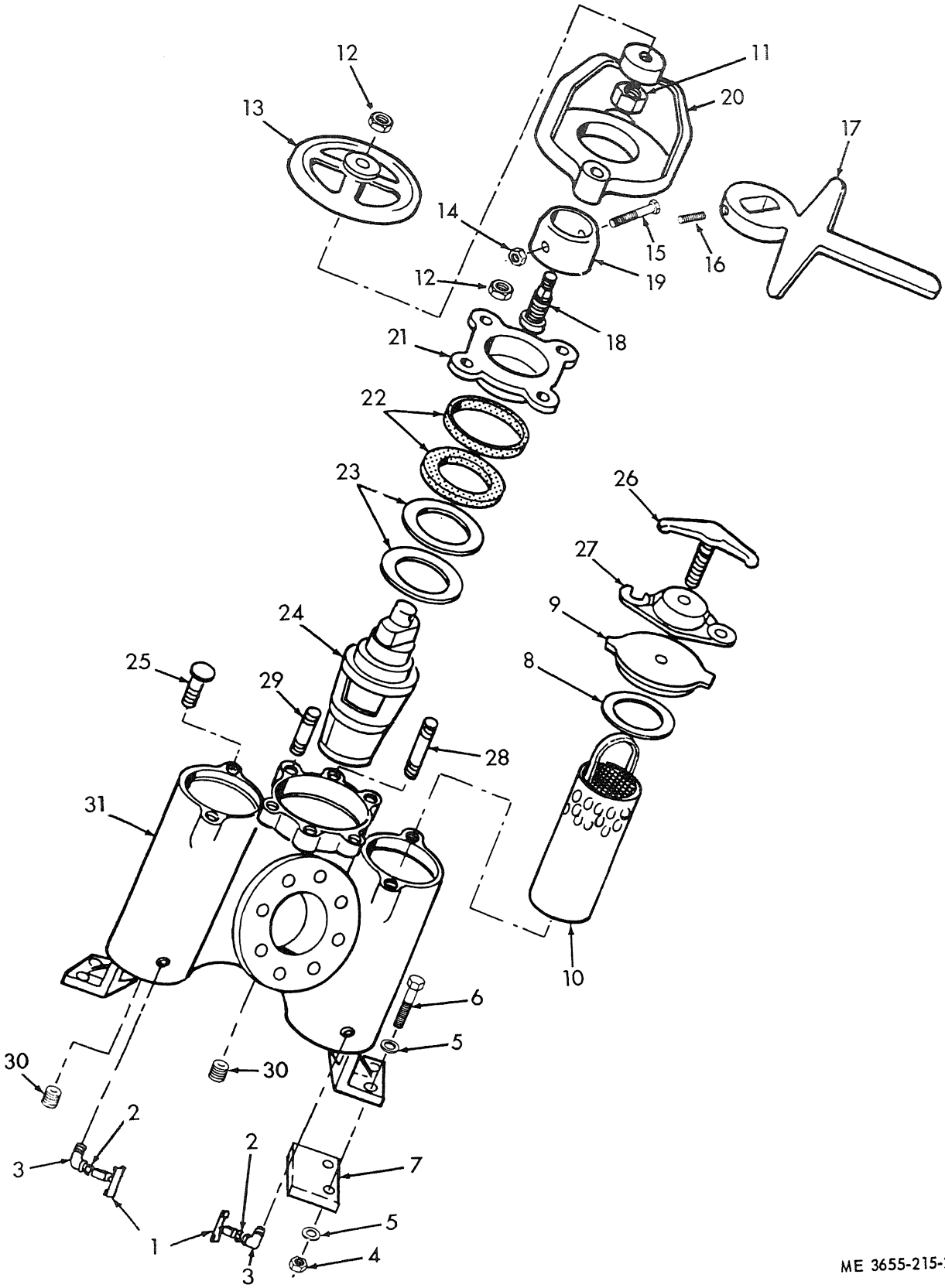
12
13
11
20
17
14
15
16
12
19
18
21
22
23
26
27
9
24
8
25
29
28
31
10
6
5
30
30
2
3
2
7
1
5
3
4

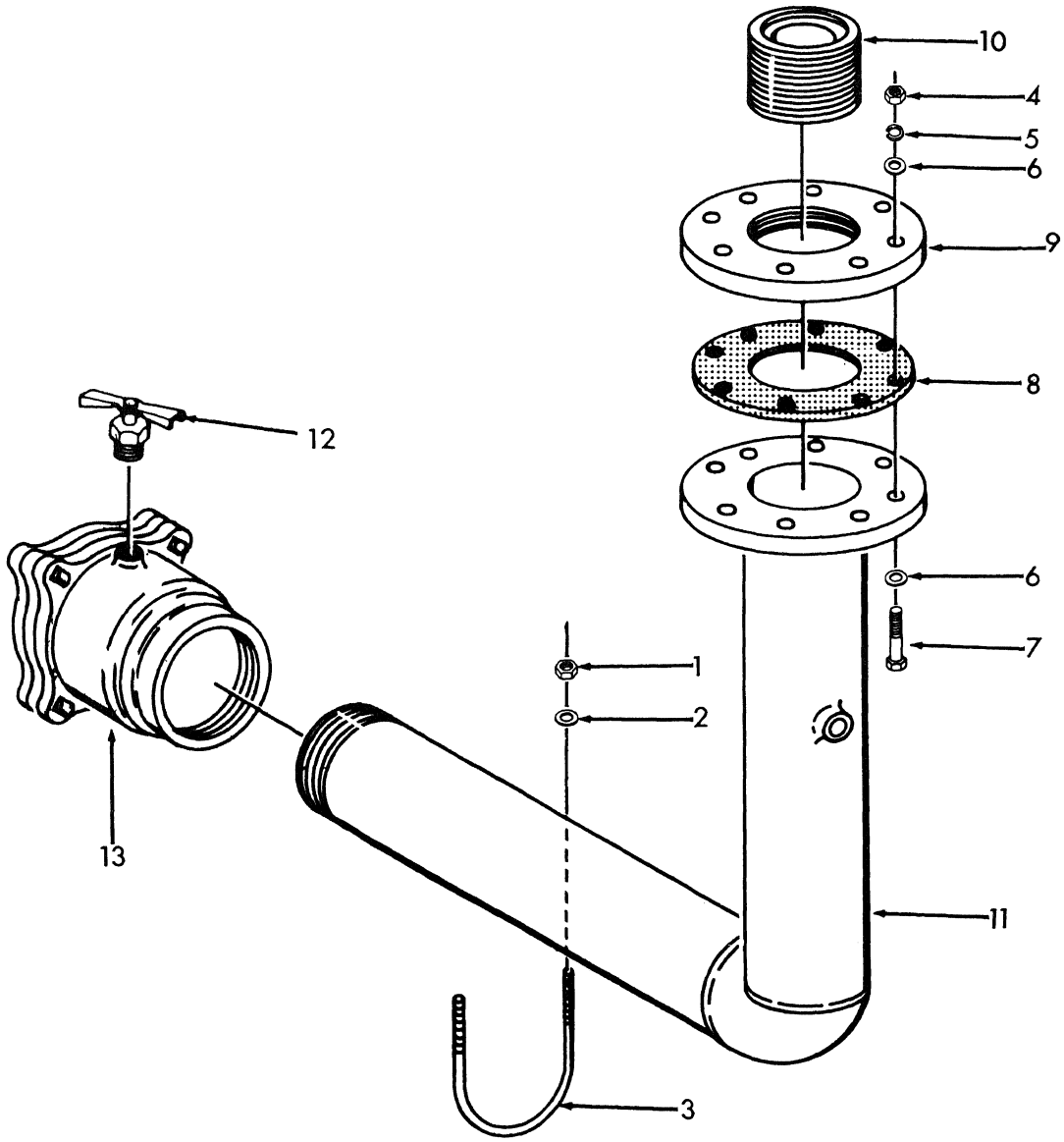

ME 3655-215-25P

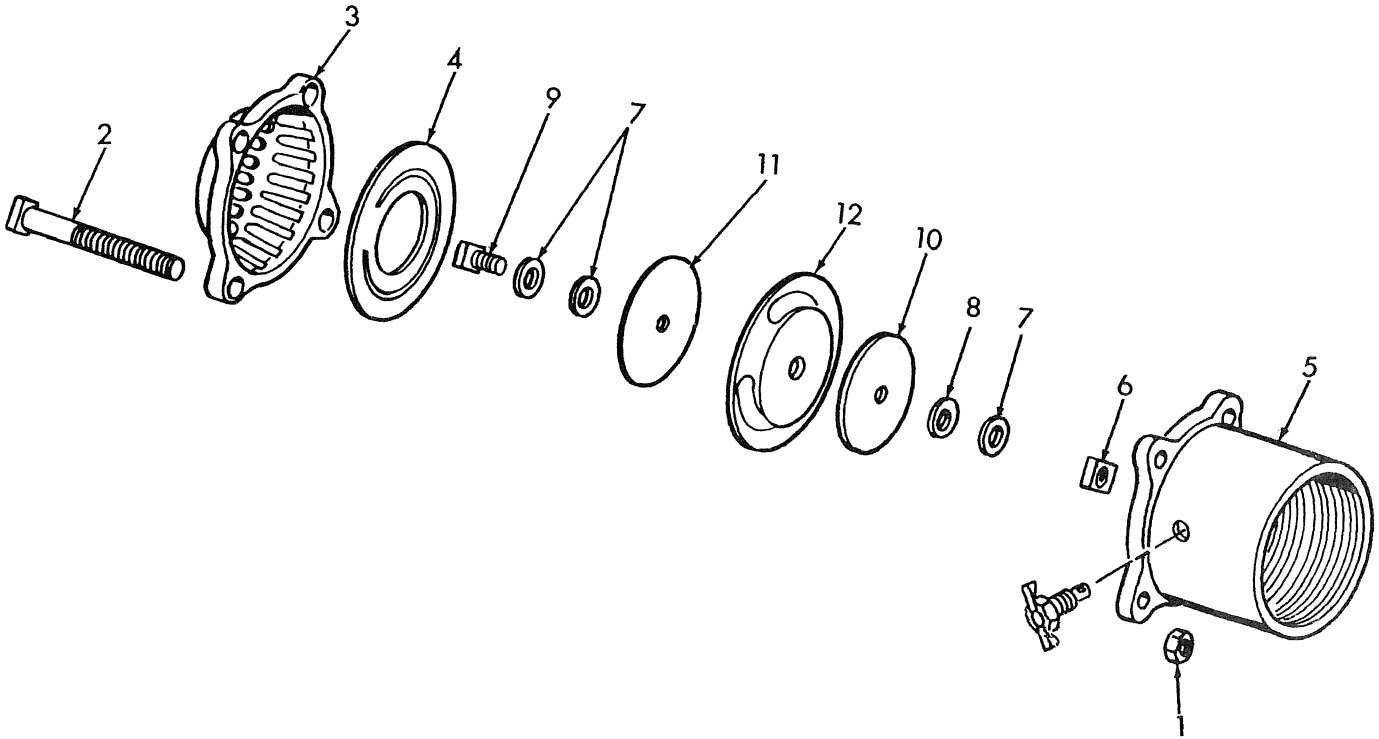

ME 3655-215-25P/14

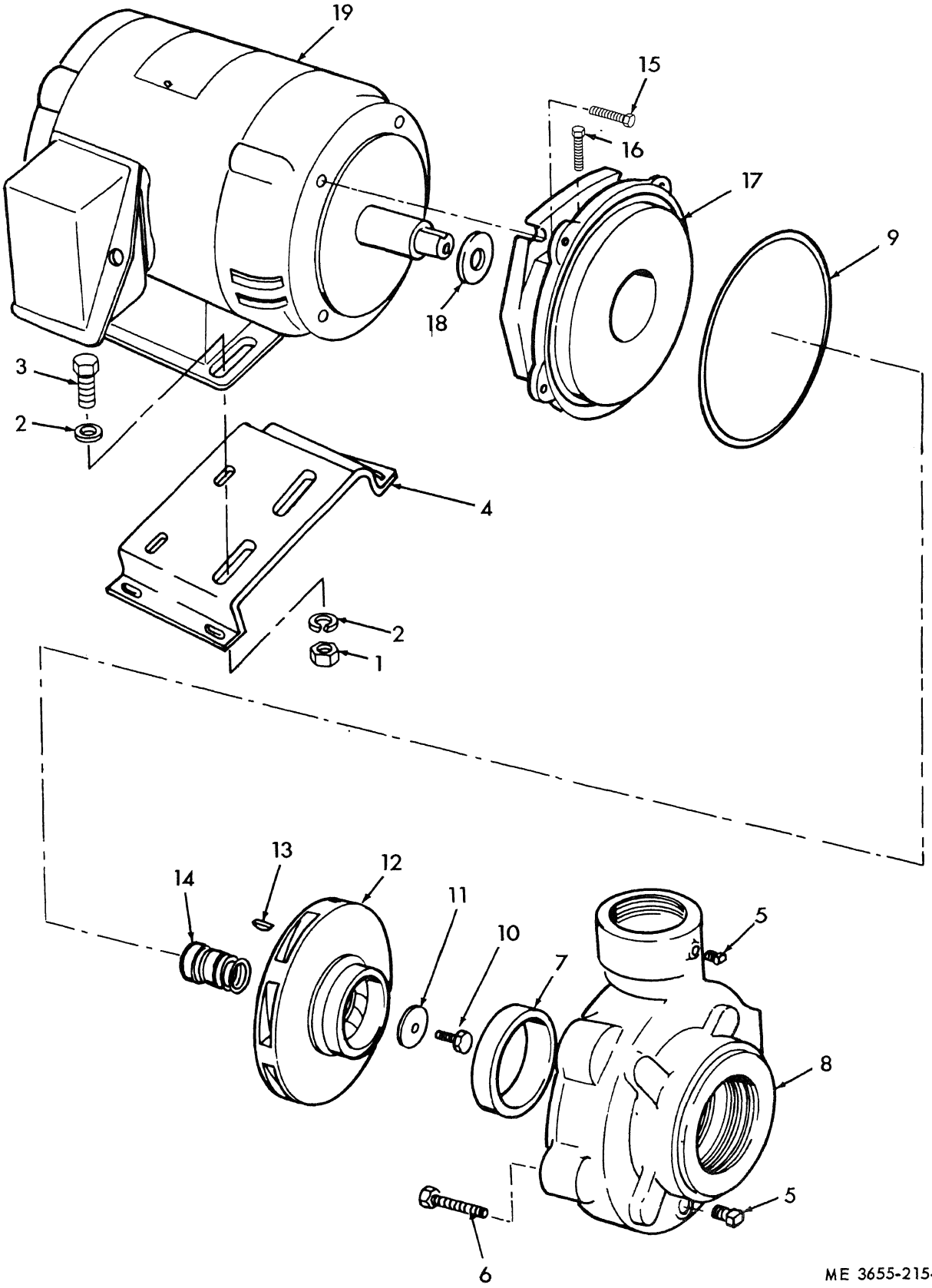
19
15
16
17
9
18
3
2
4
2
1
13
12
14
11
10
7
5
8
5
6

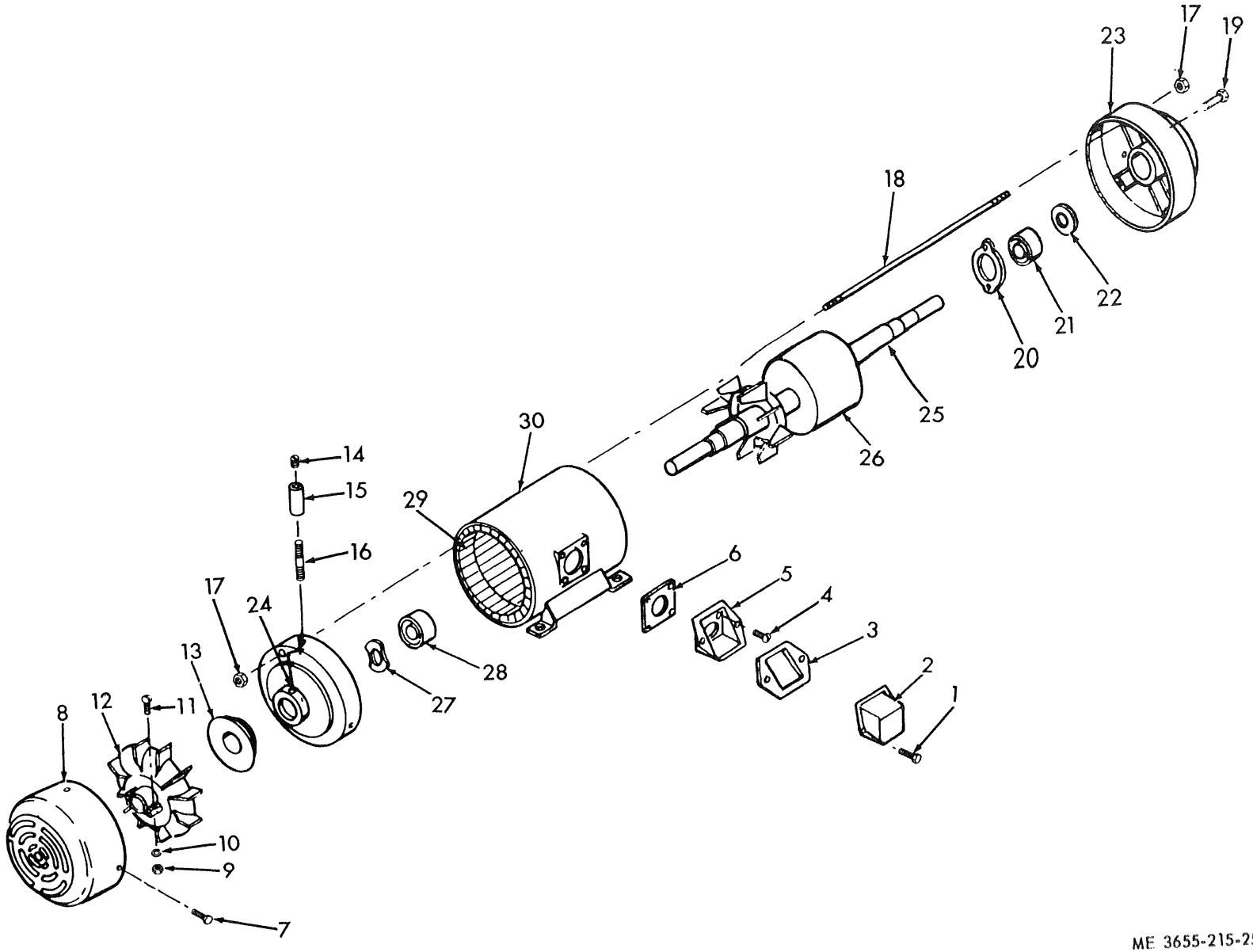

ME 3655-215-25P/16

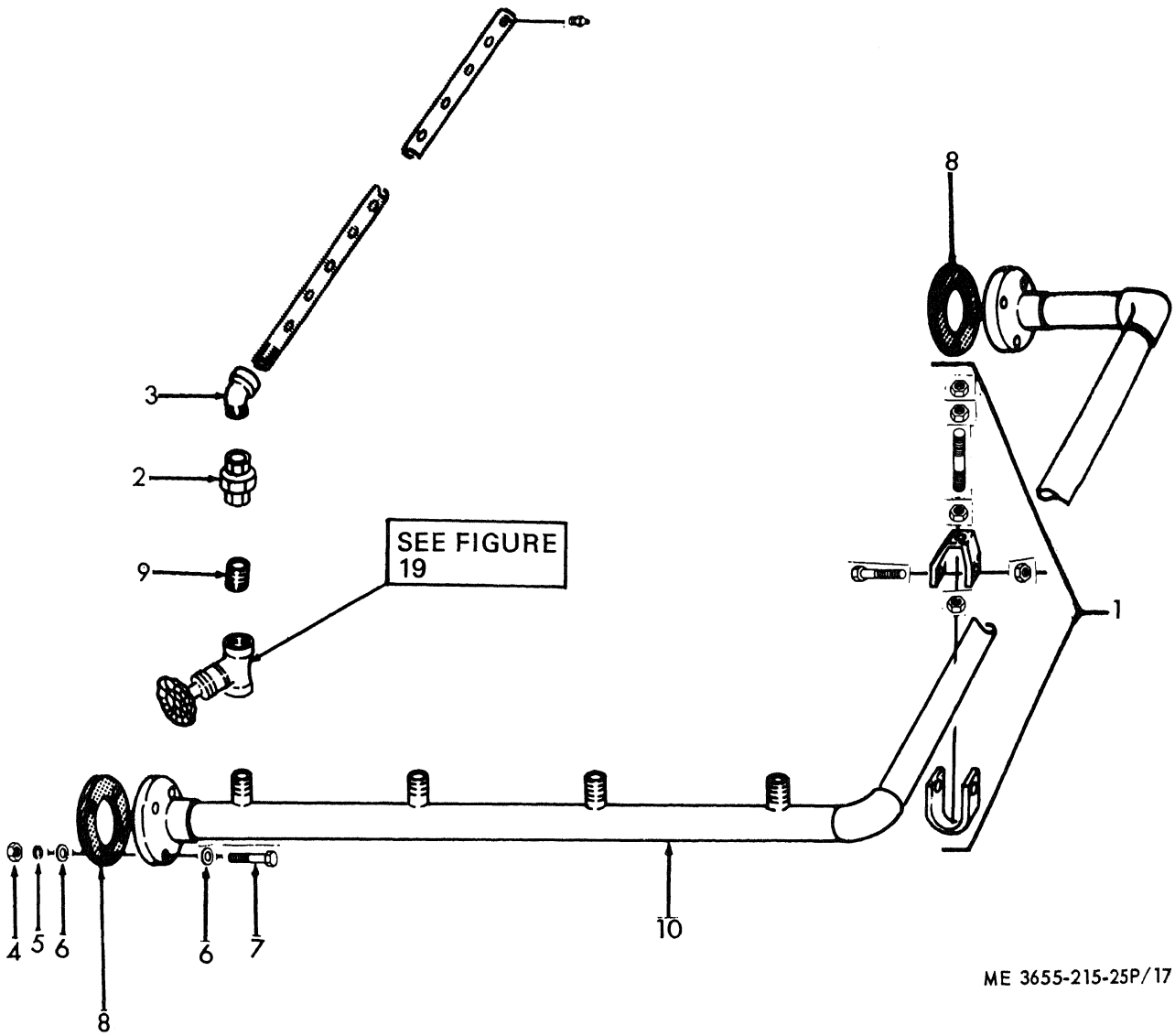
8
3
2
9
SEE FIGURE 19
1
4
5
6
8
6
7
10
ME 3655-215-25P/17

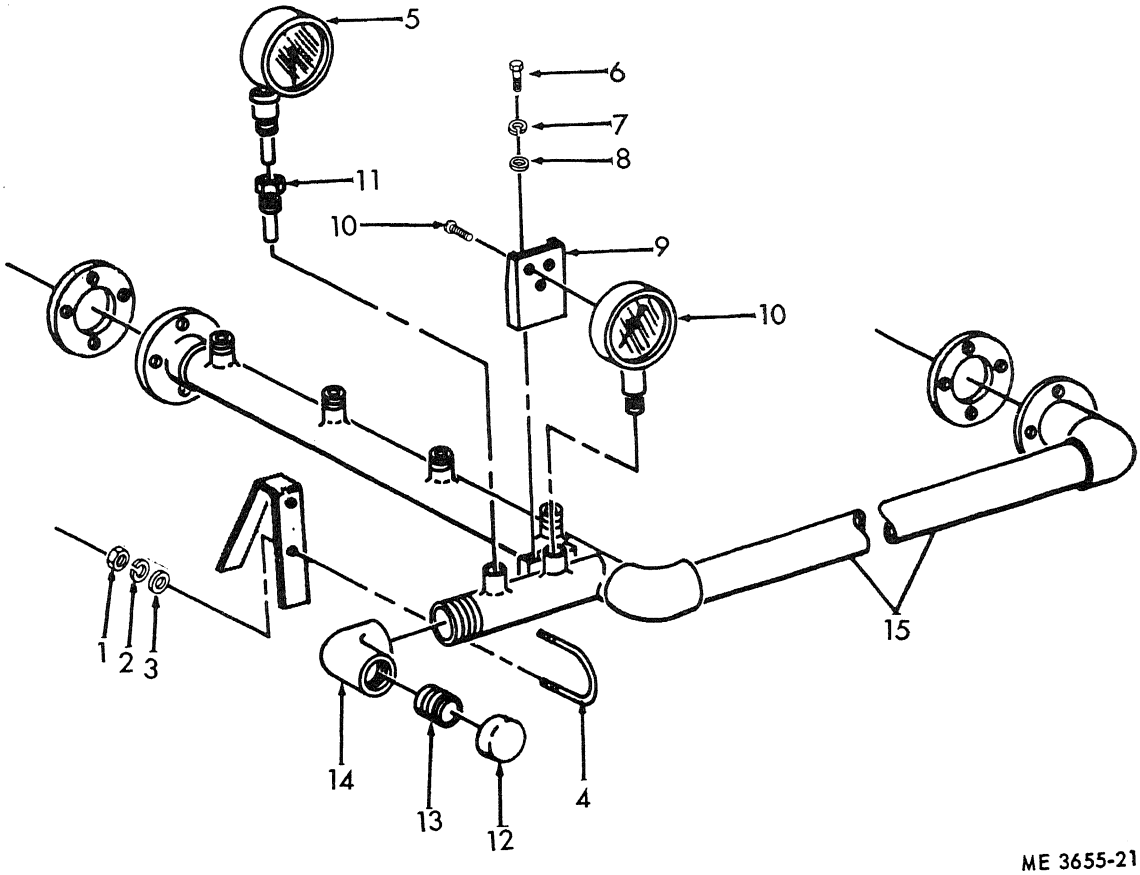

ME 3655-215-25P/18

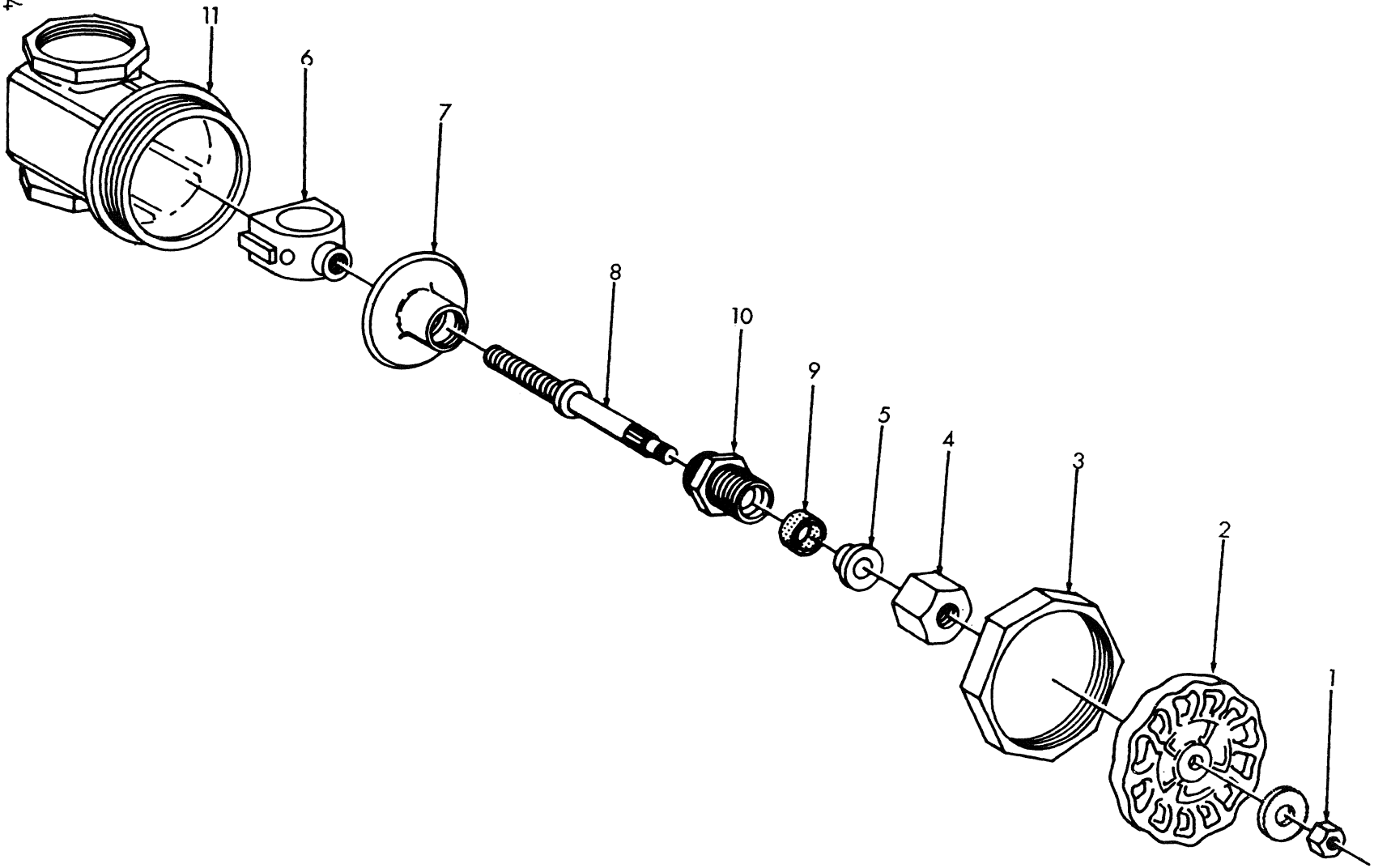

ME 3655-215-25P/19

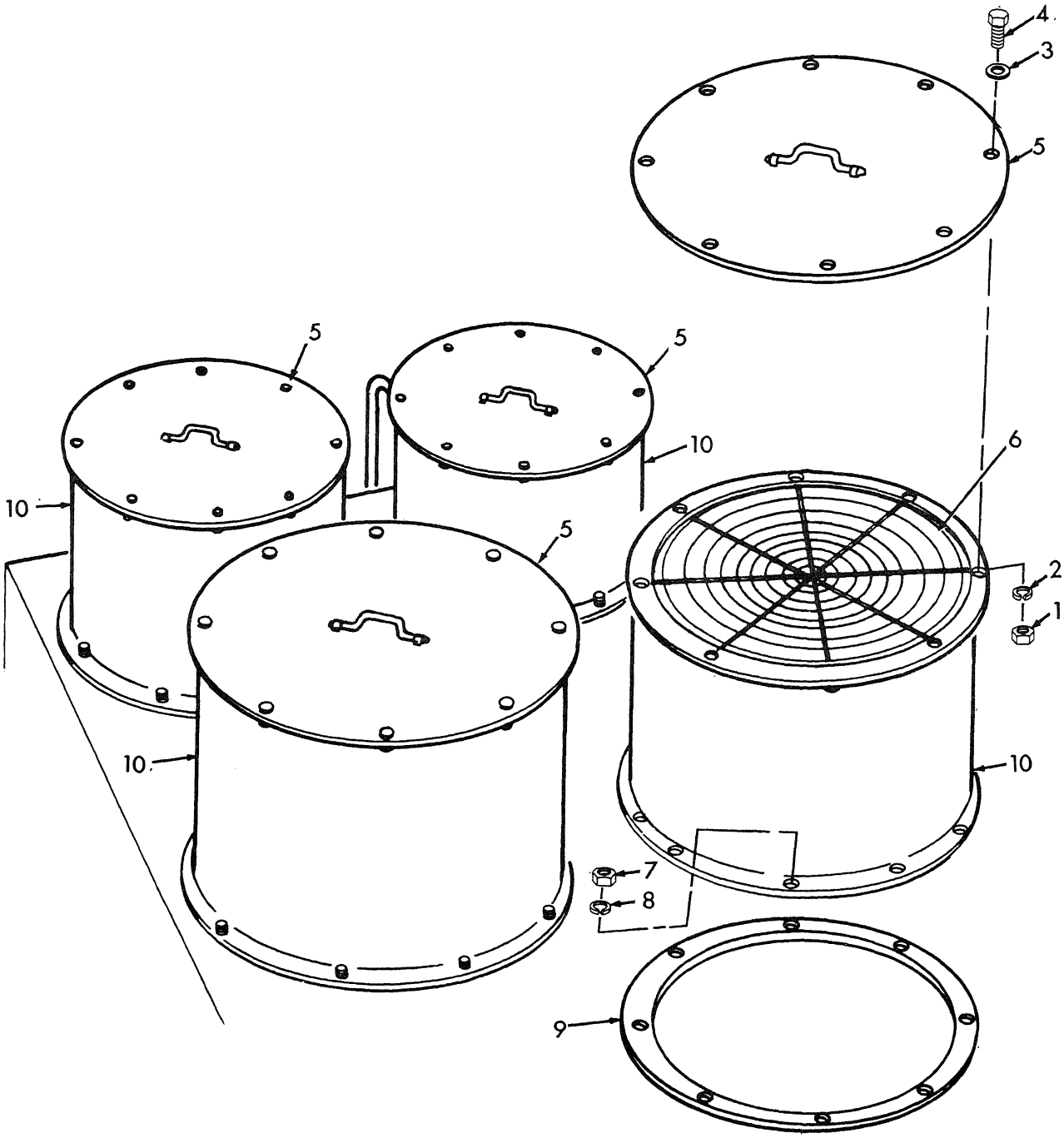

ME 3655-215-25P/20

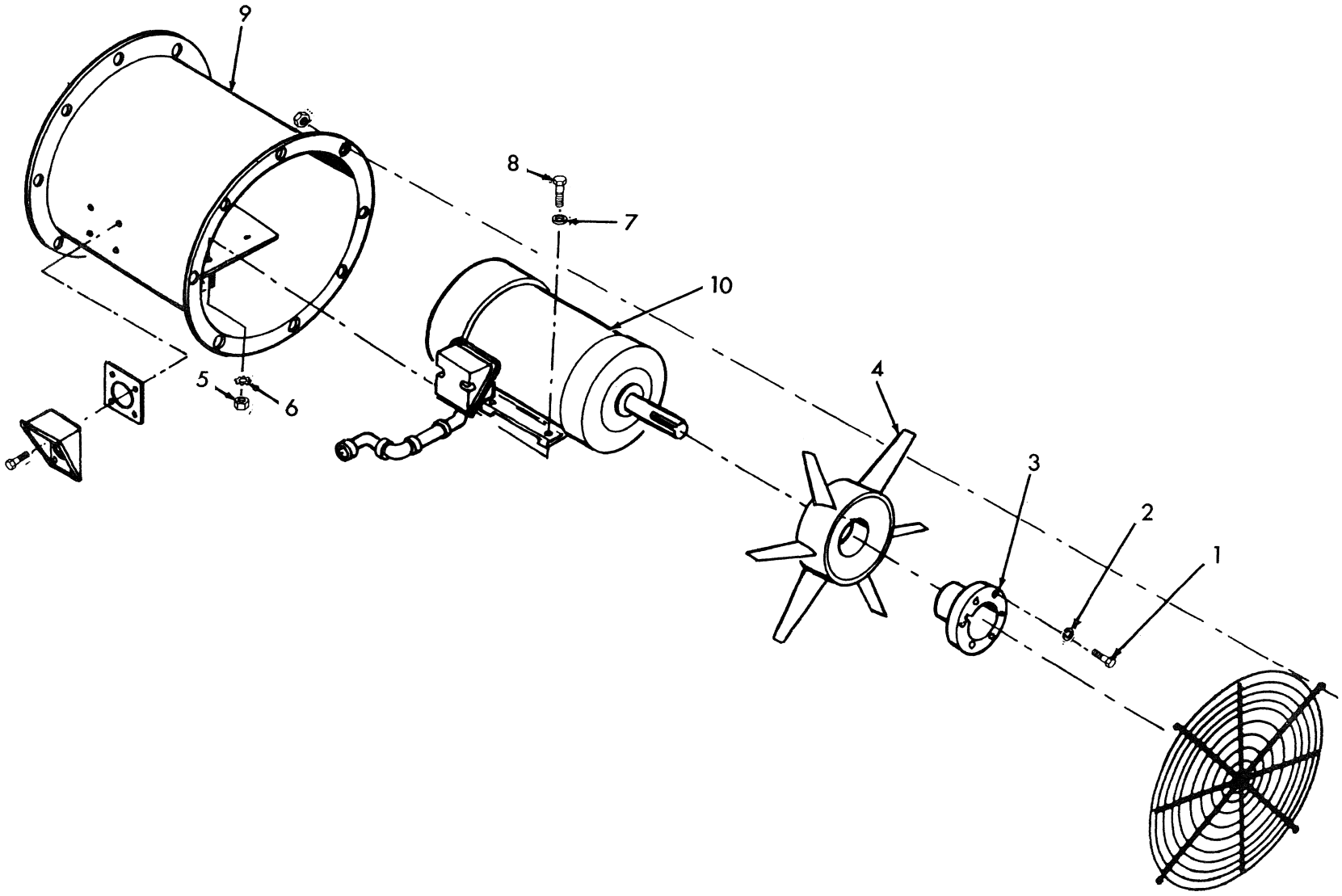

ME 3655-215-25P/21

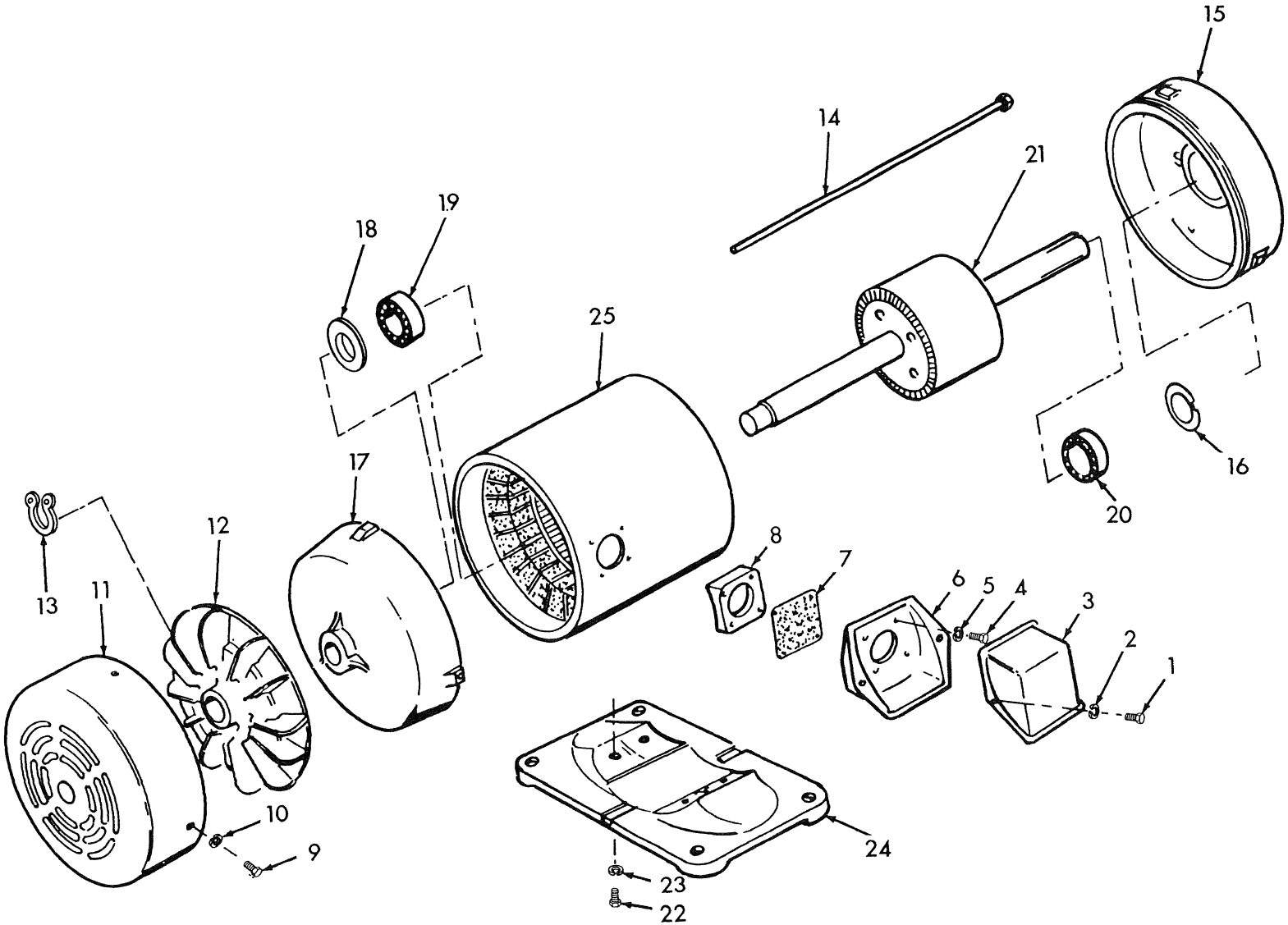

ME 3655-215-25P/22

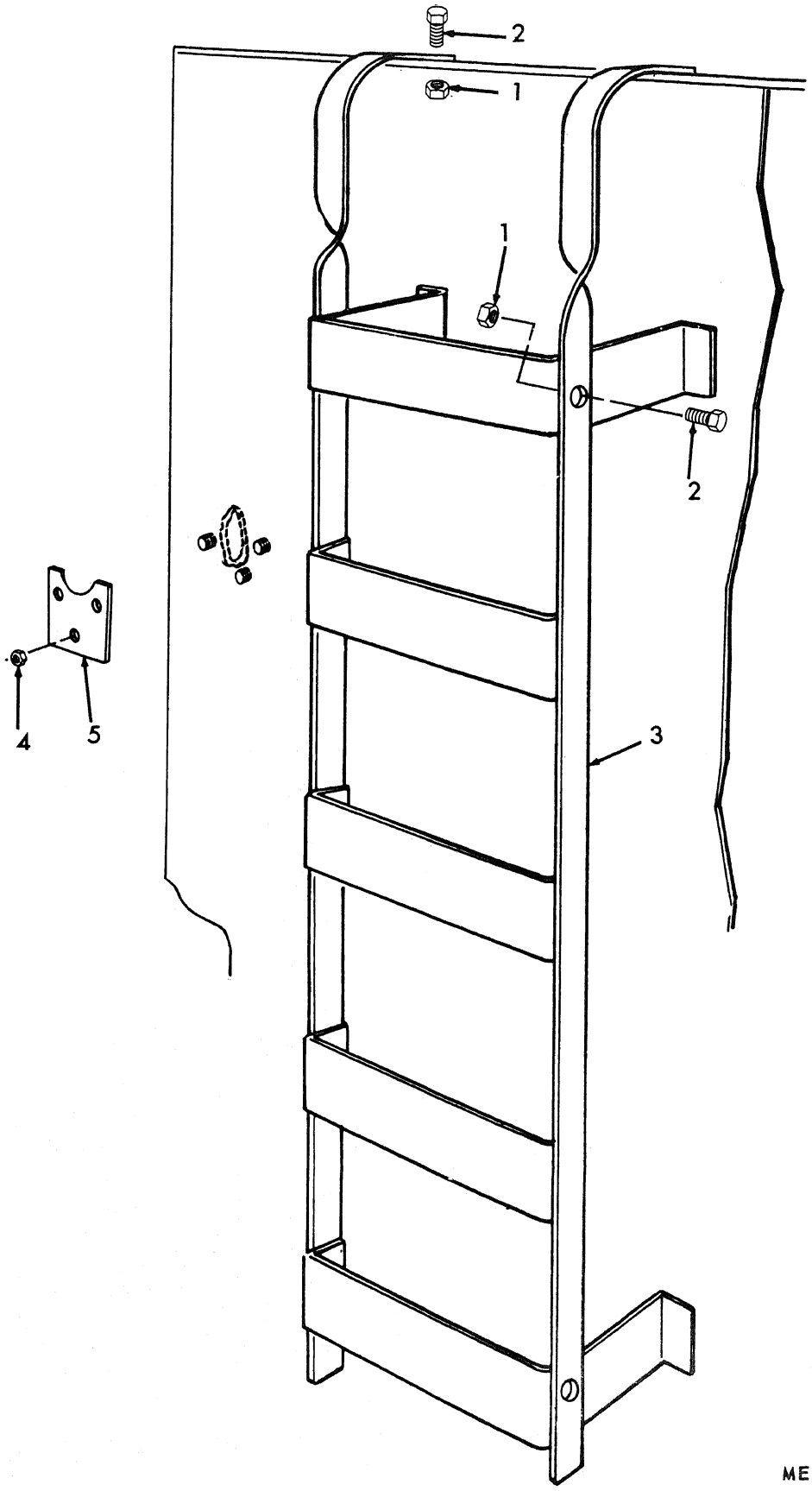
2
1
1
2
3
4
5

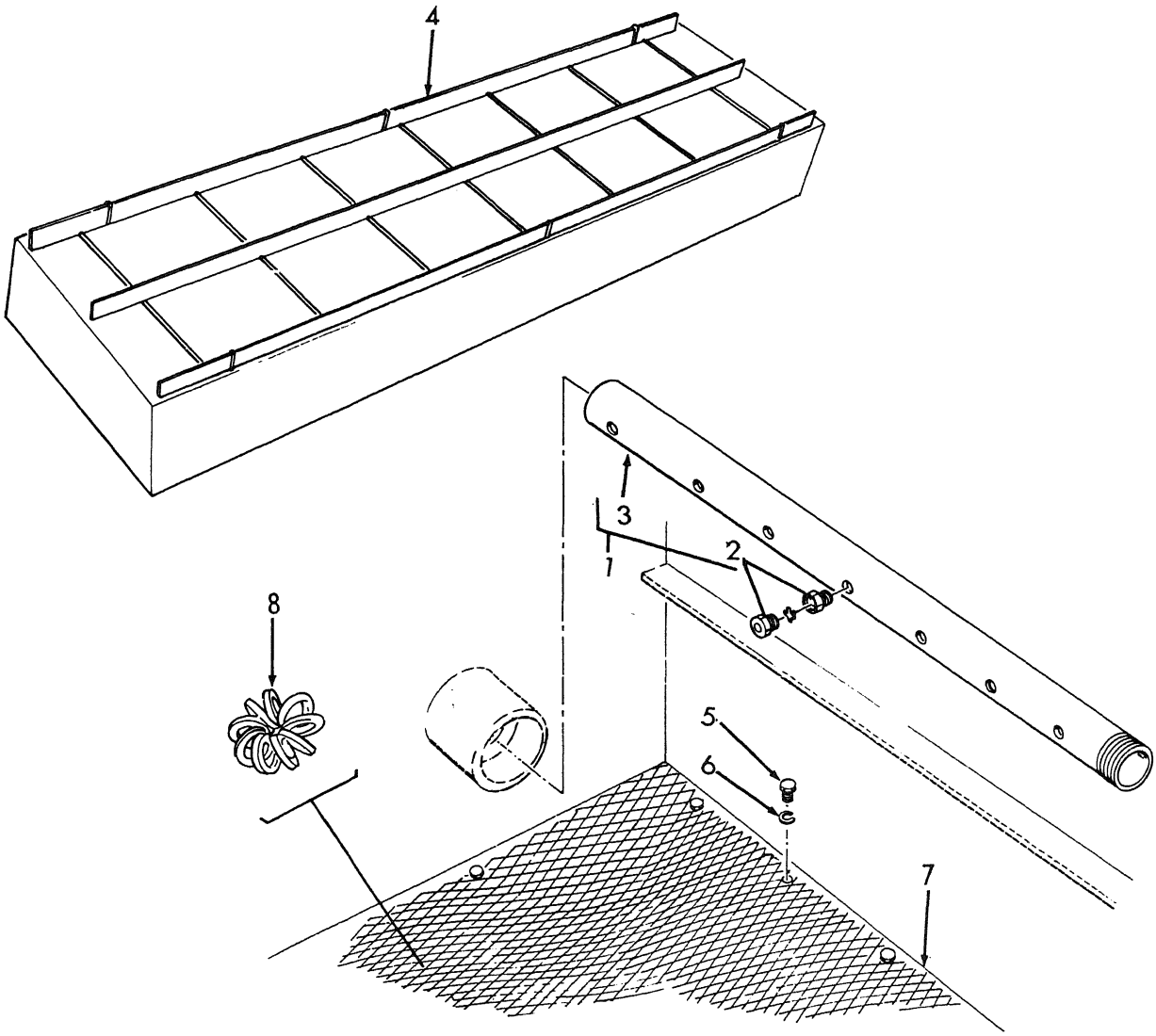

ME 3655-215-25P/24

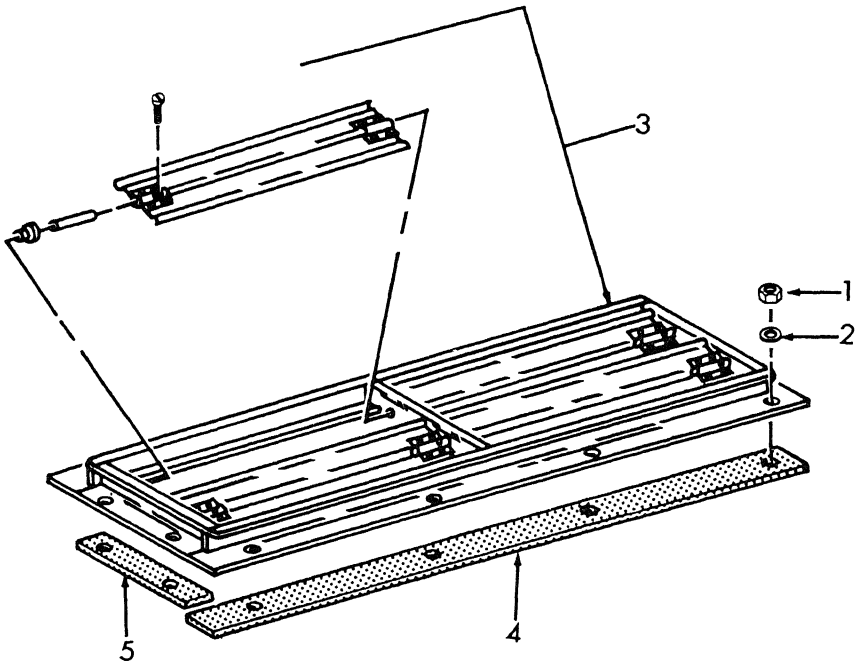

ME 3655-215-25P/25

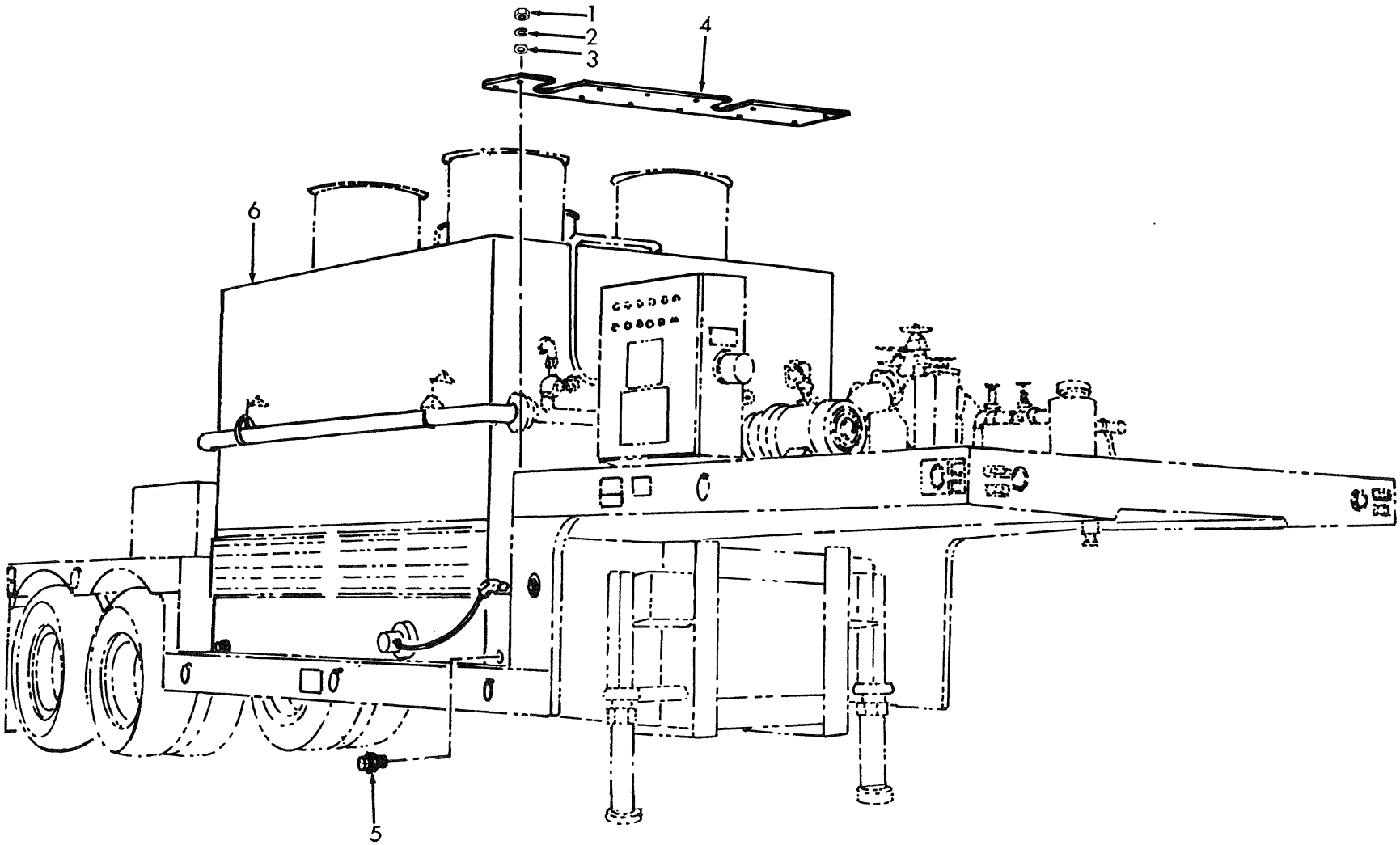
1
2
3
4
5
6

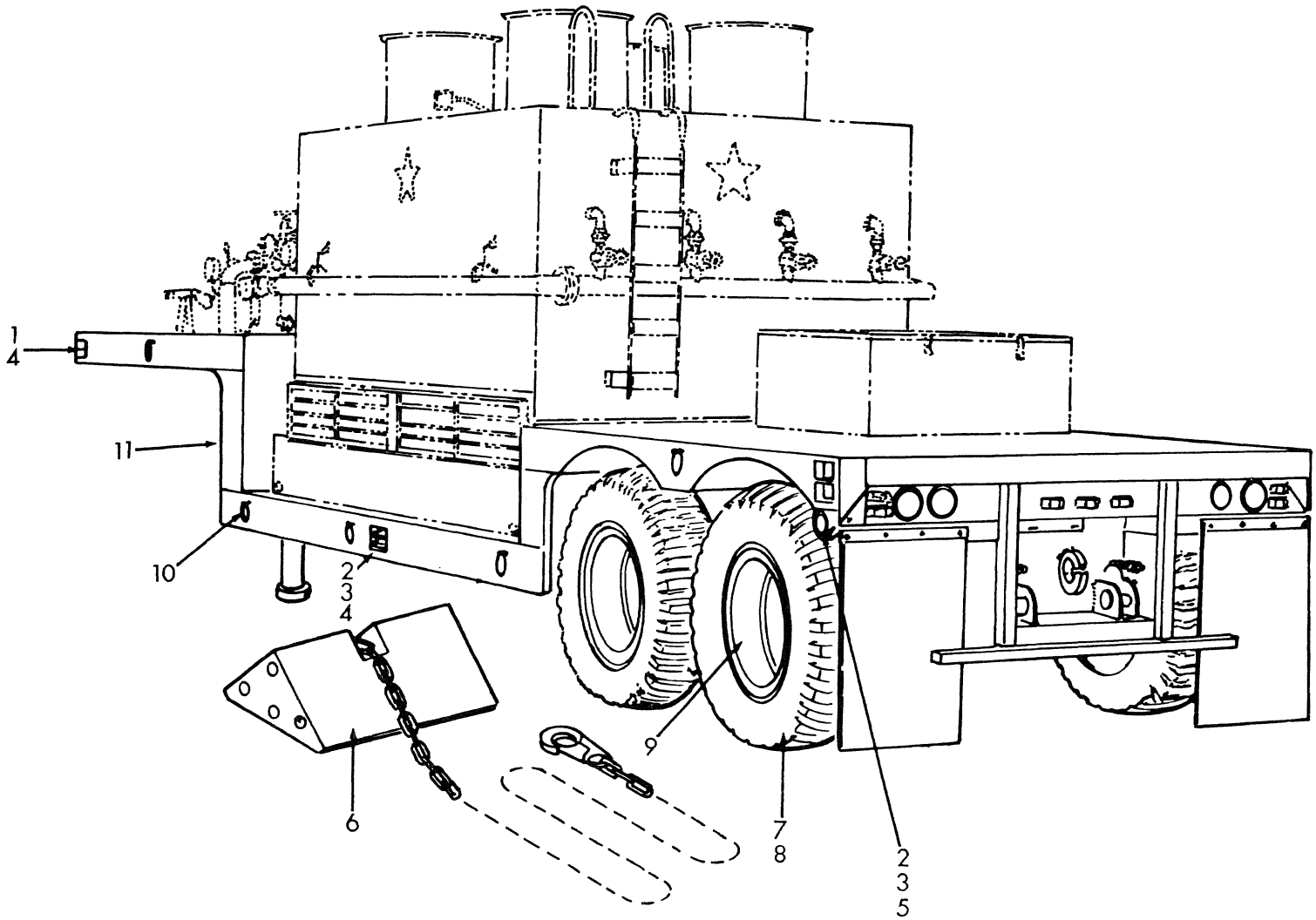

ME 3655-215-25P/27

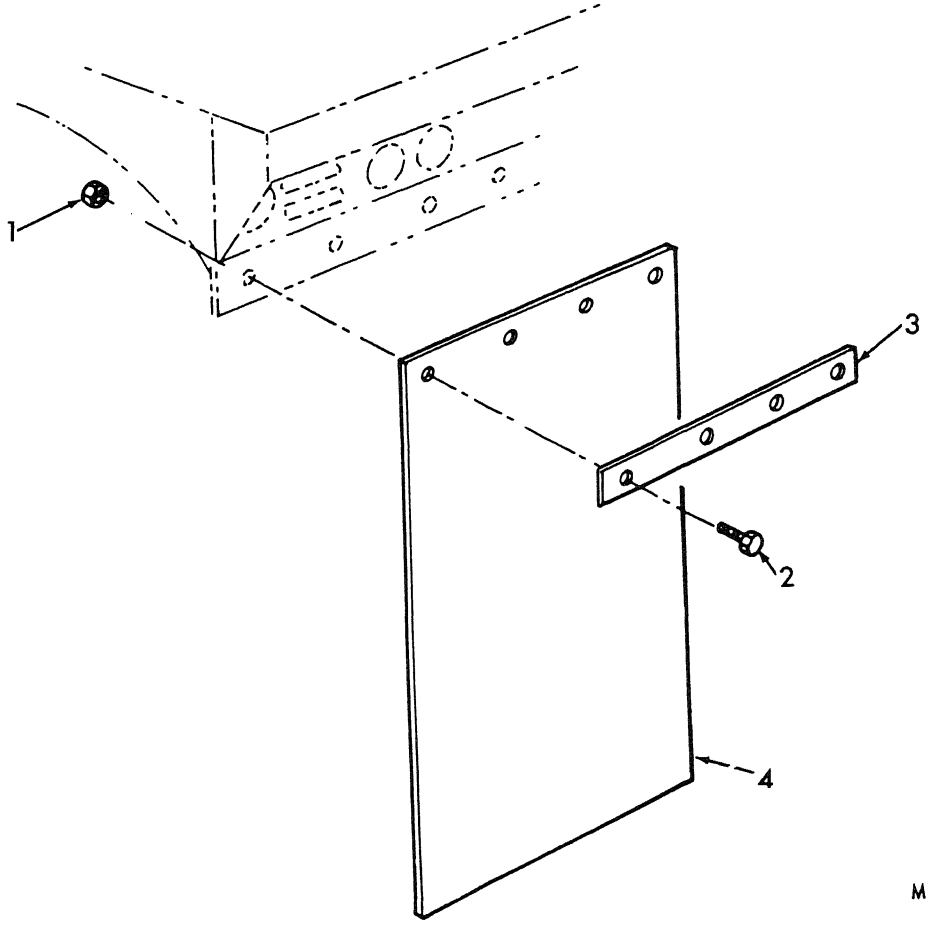

ME 3655-215-25P/28

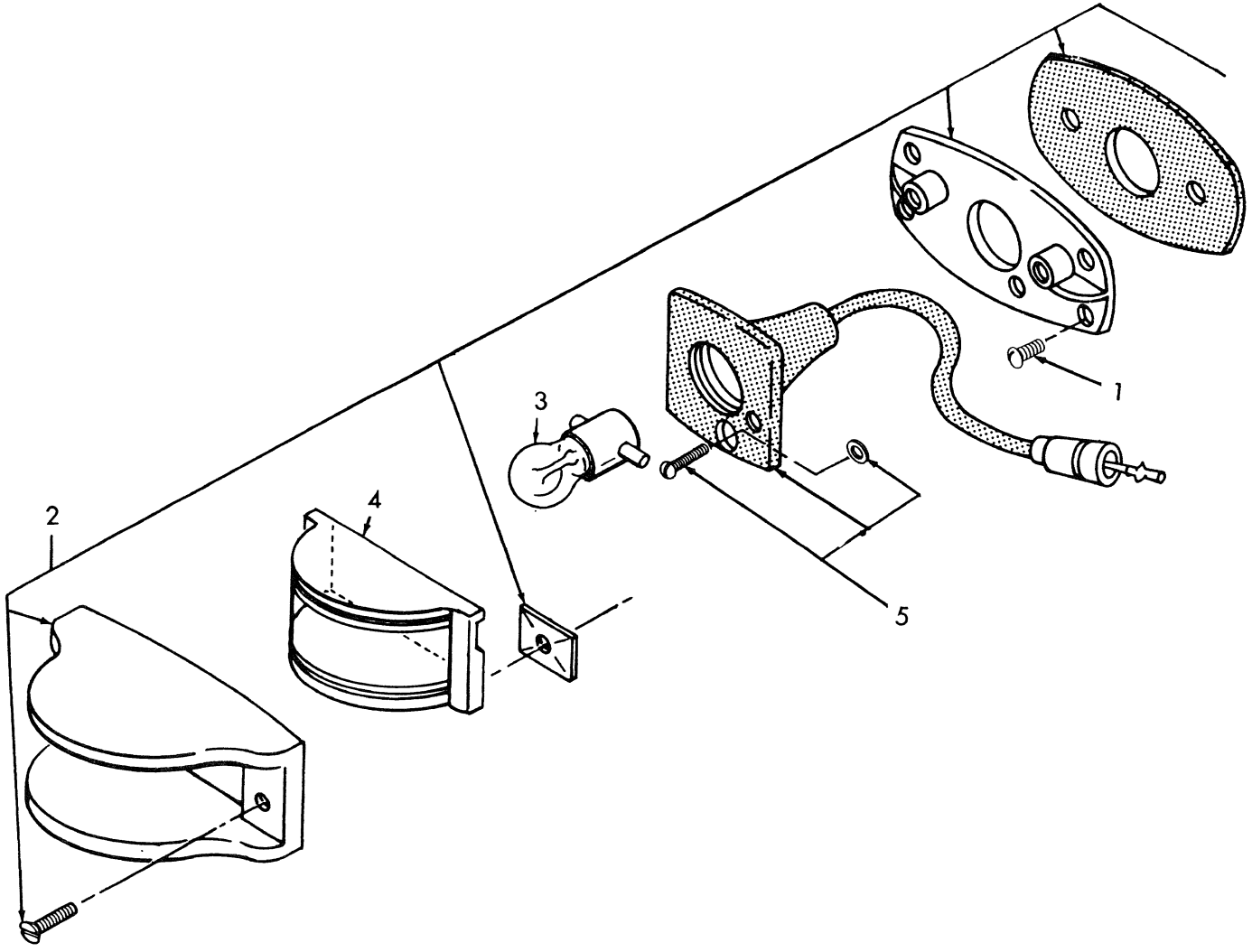
1
2
3
4
5

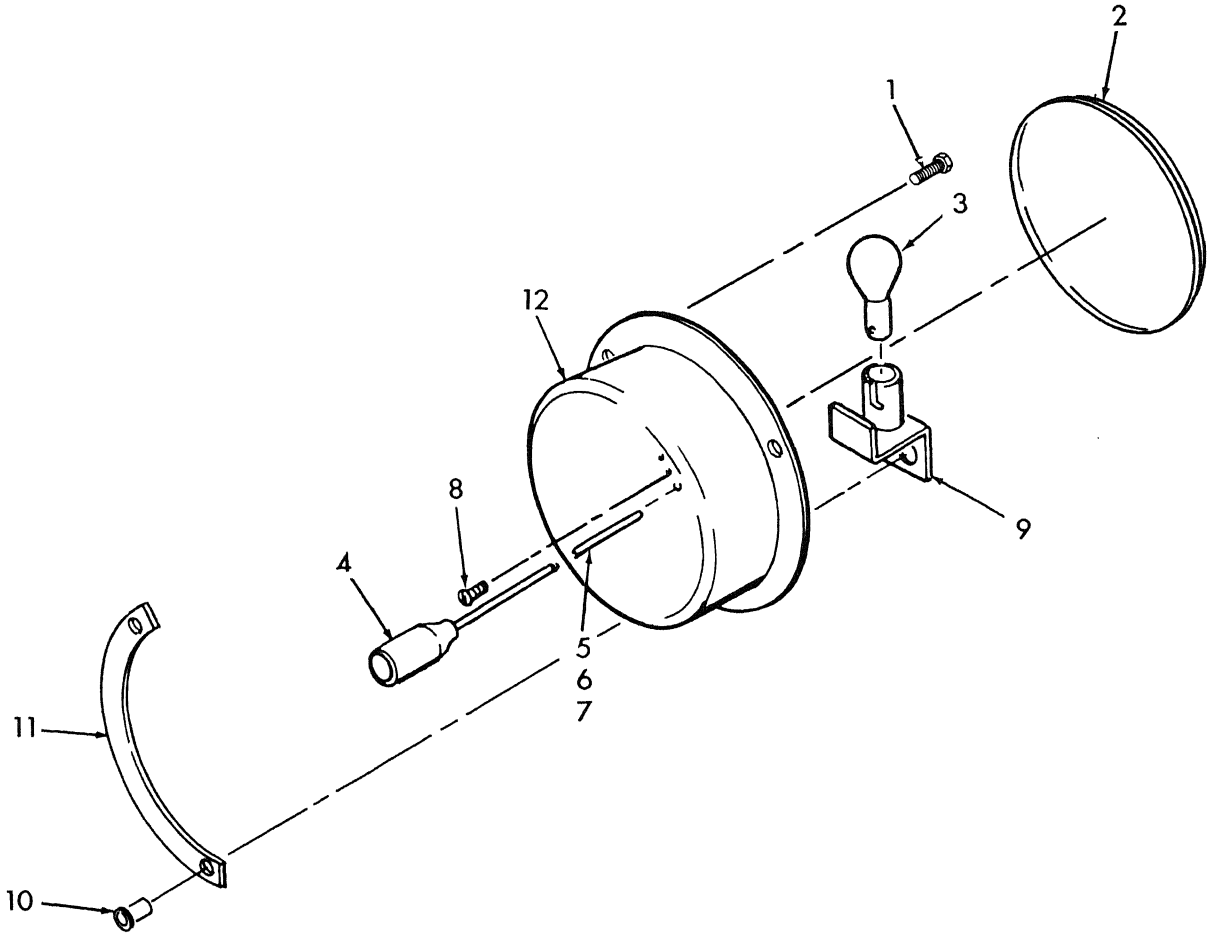

ME 3655-215-25P/30

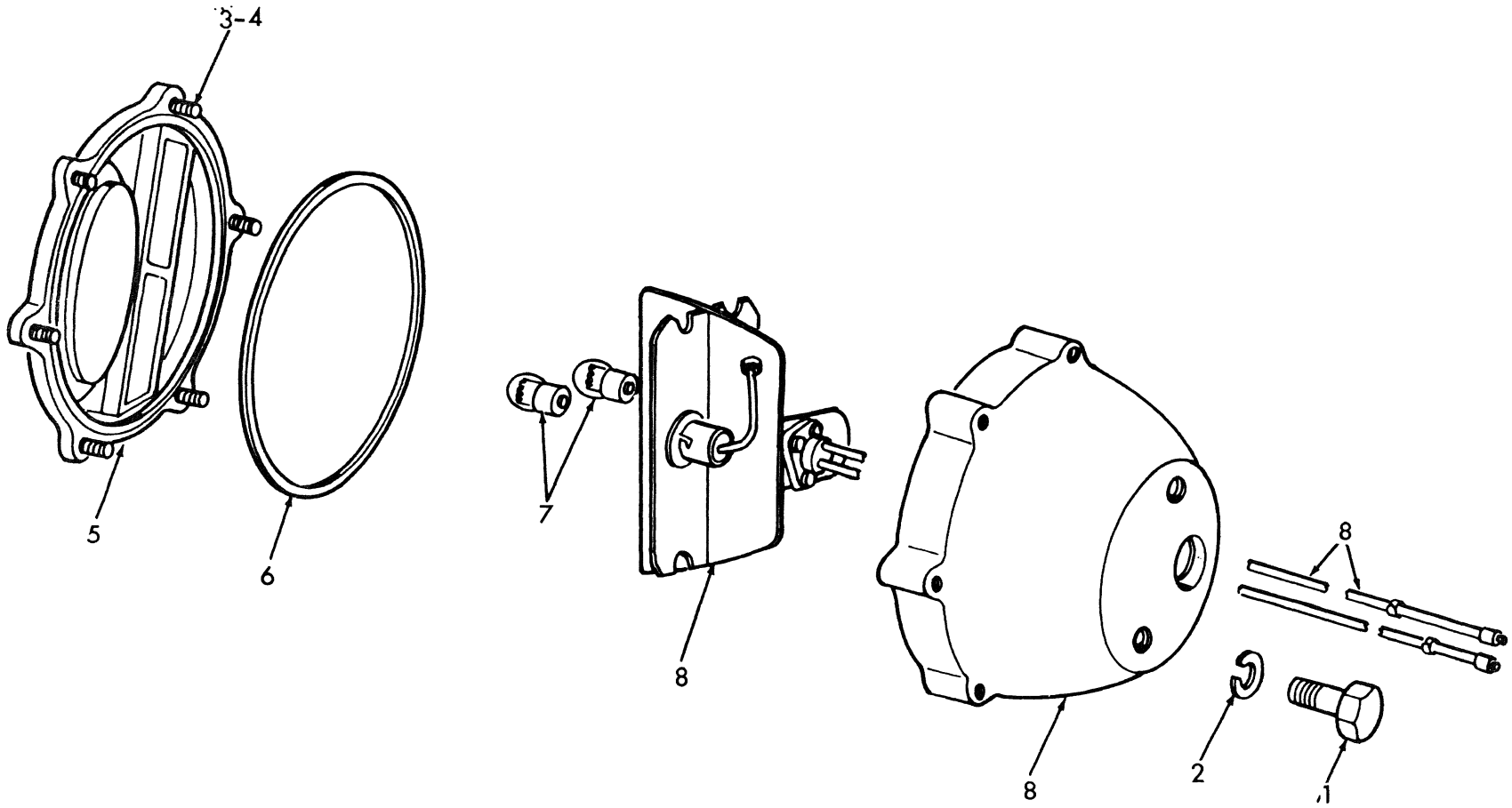

ME 3655-215-25P/31

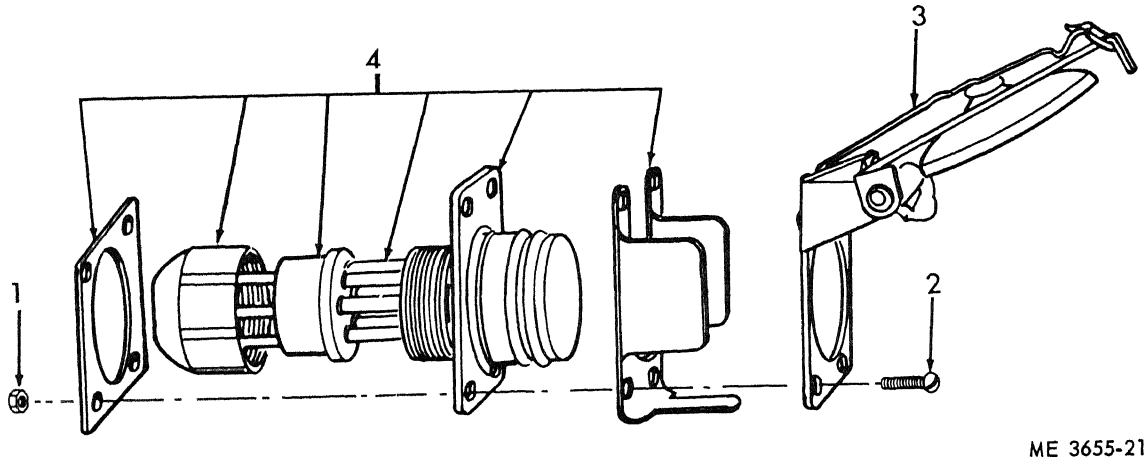

ME 3655-215-25P/32

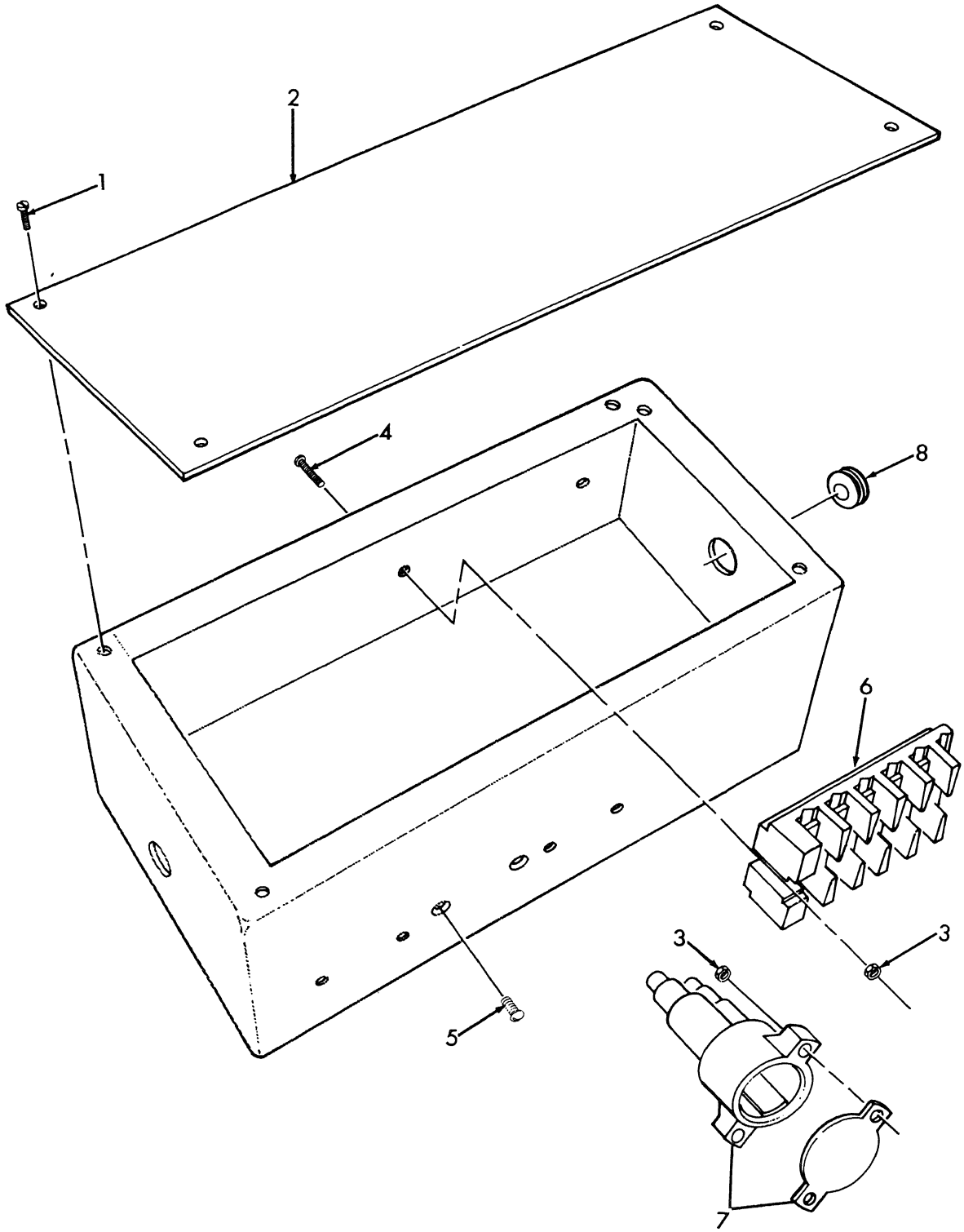

ME 3655-215-25P/33

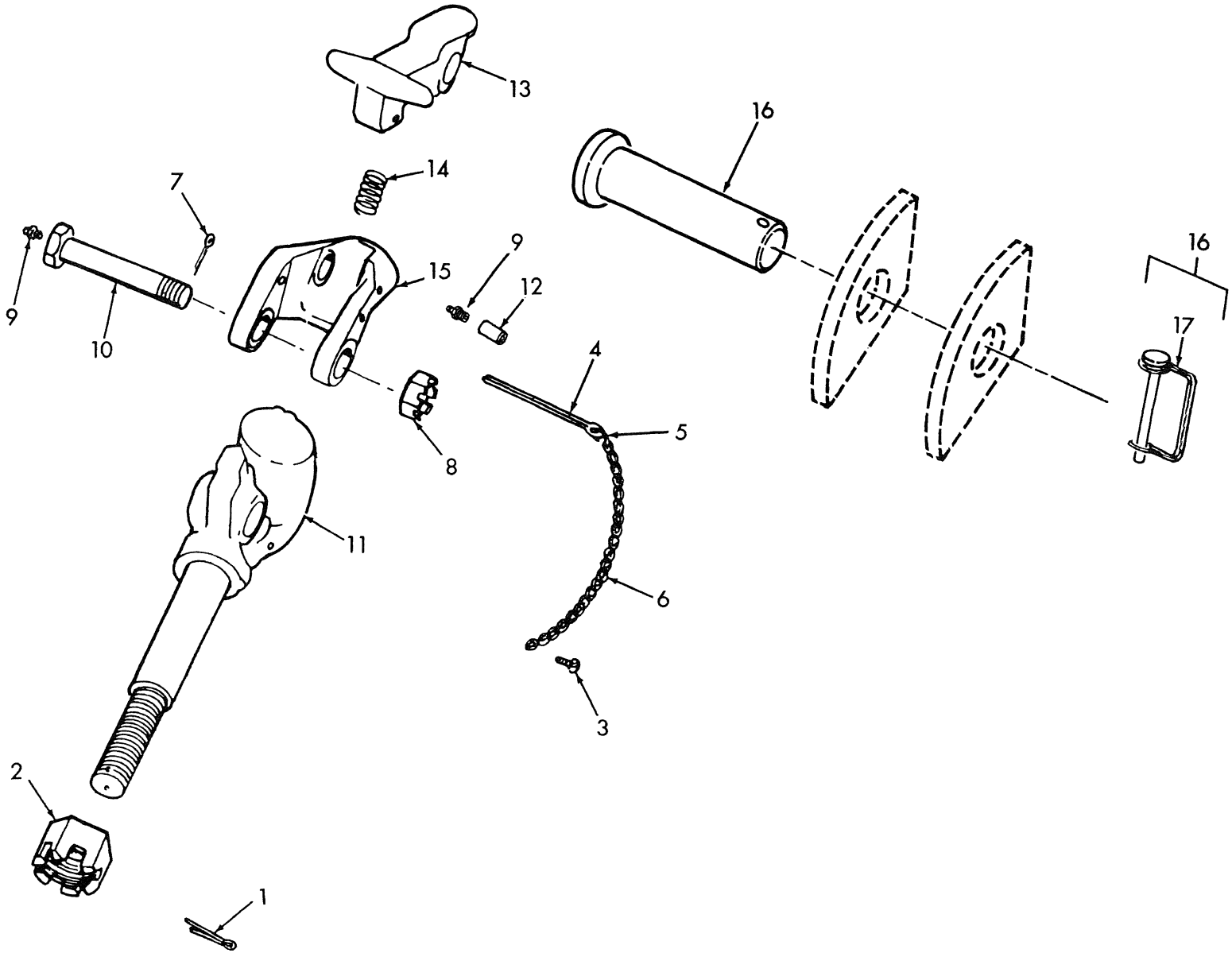

ME 3655-215-25P/34

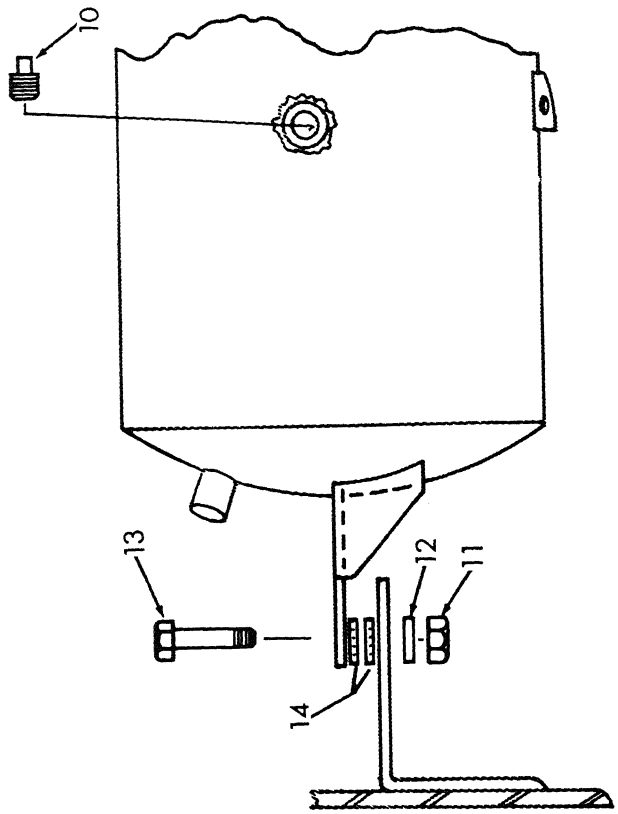

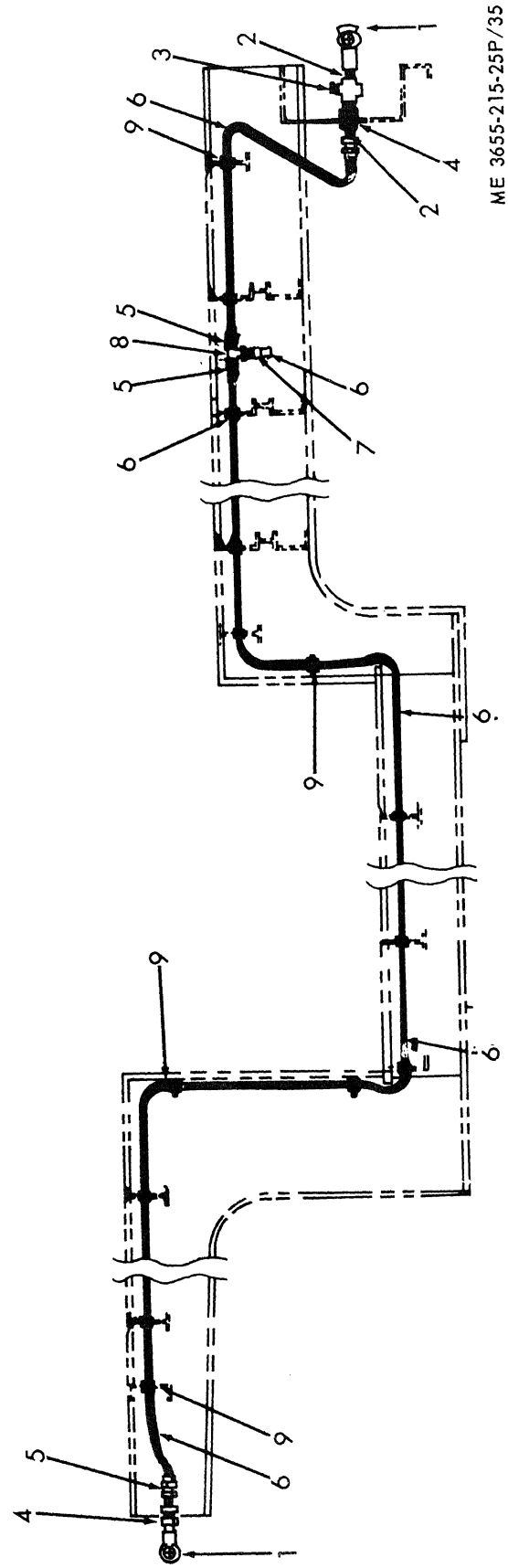

ME 3655-215-25P/35

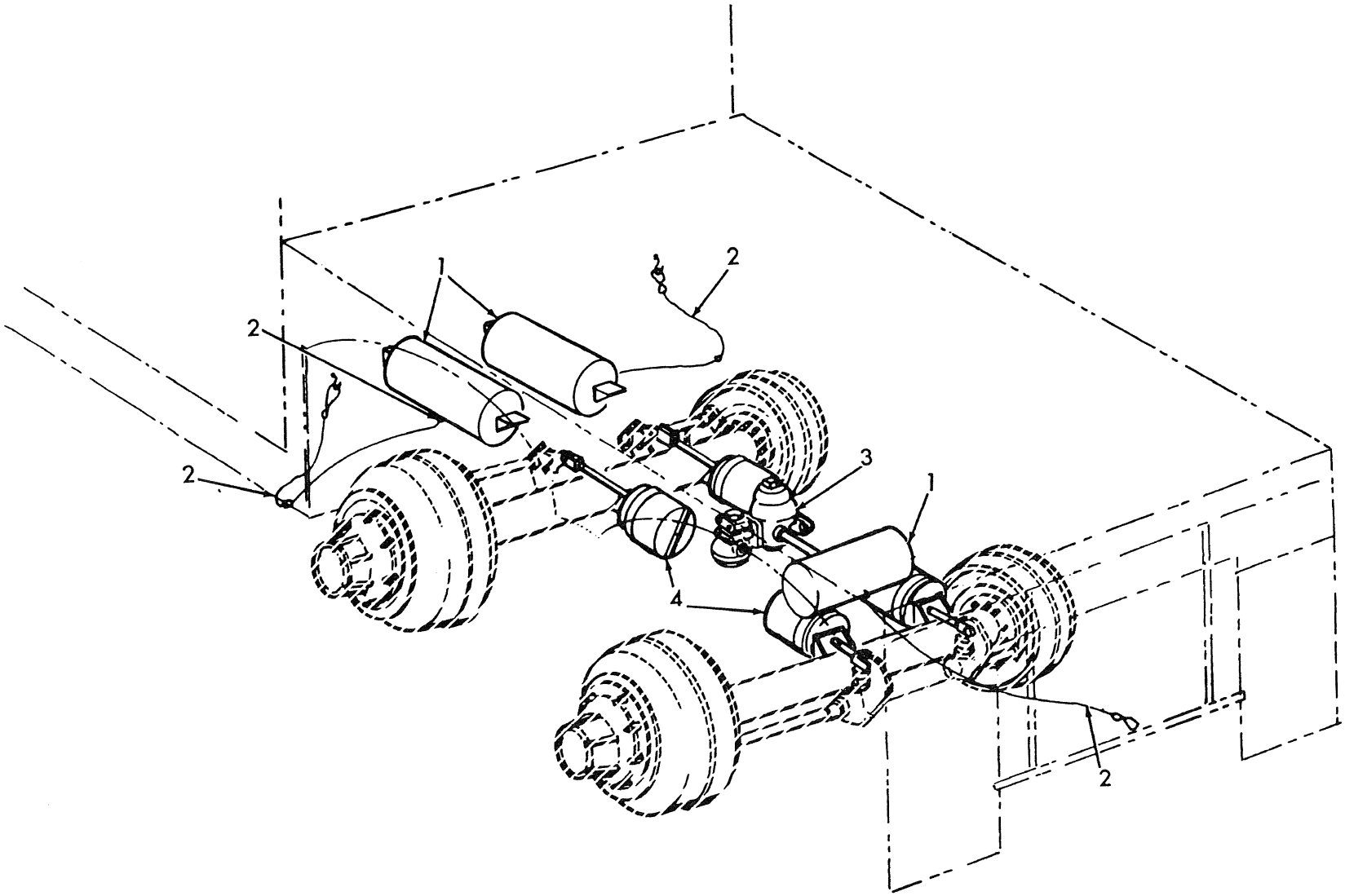

ME 3655-215-25P/36

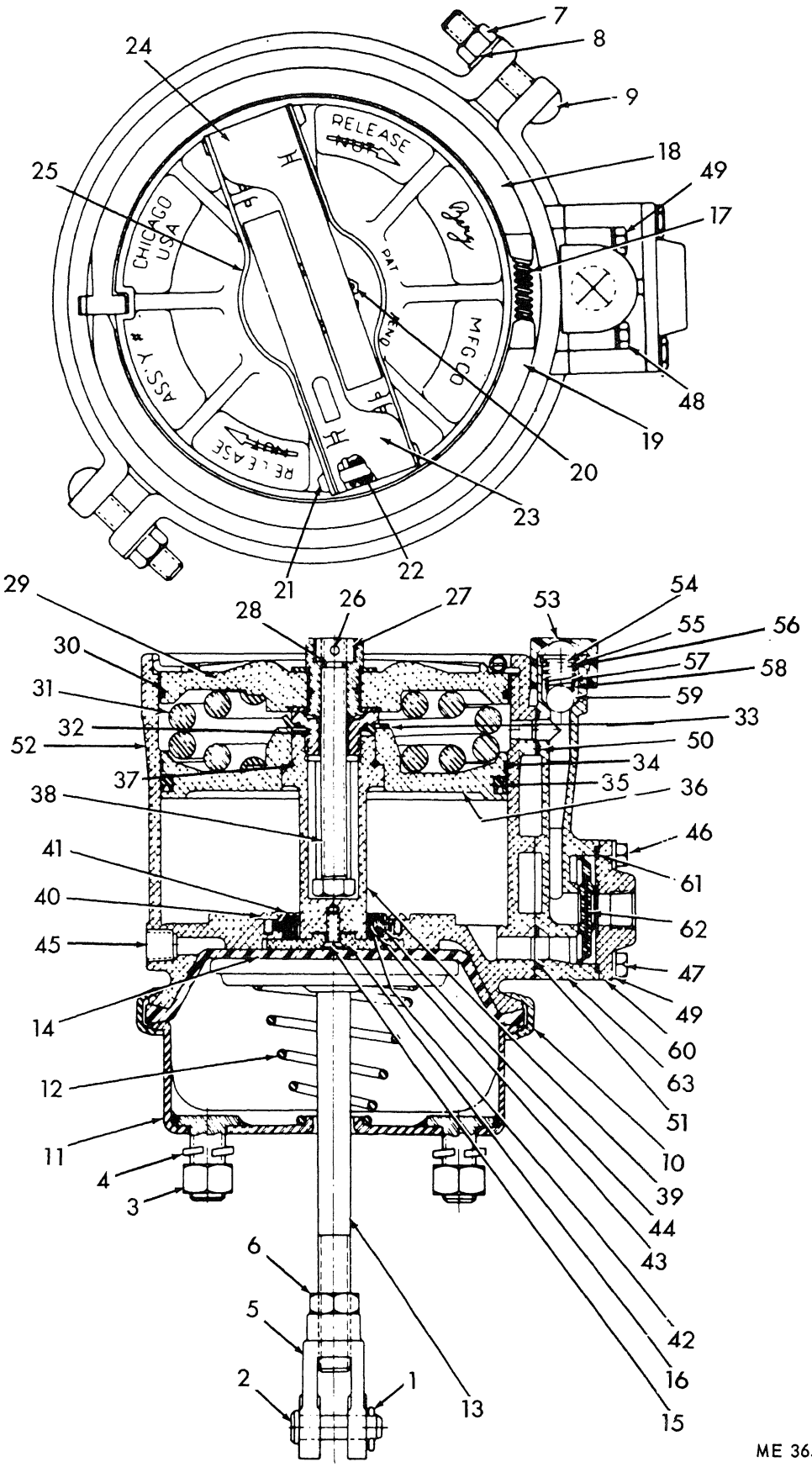
RELEASE
NOT
CHICAGO
USA
ASS'Y #
MFG CO
PAT
PND
RELEASE
NOT
7
8
9
24
25
18
49
17
48
19
20
23
21
22
29
28
26
27
53
54
55
56
57
58
59
30
31
32
52
37
38
41
40
45
14
12
11
4
3
6
5
2
1
13
15
16
42
43
44
39
10
51
63
60
49
47
62
61
46
36
35
34
50
33

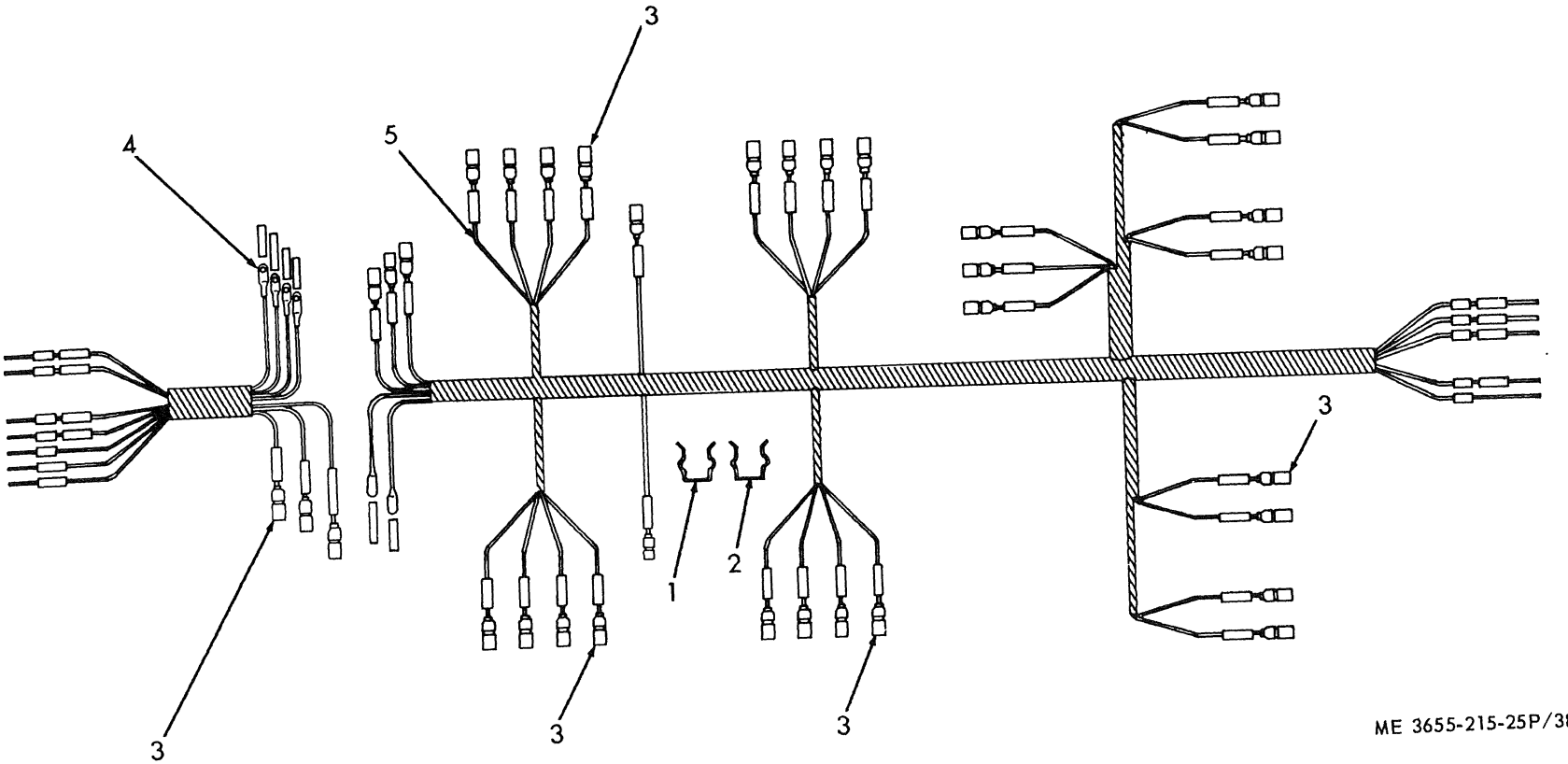

ME 3655-215-25P/38

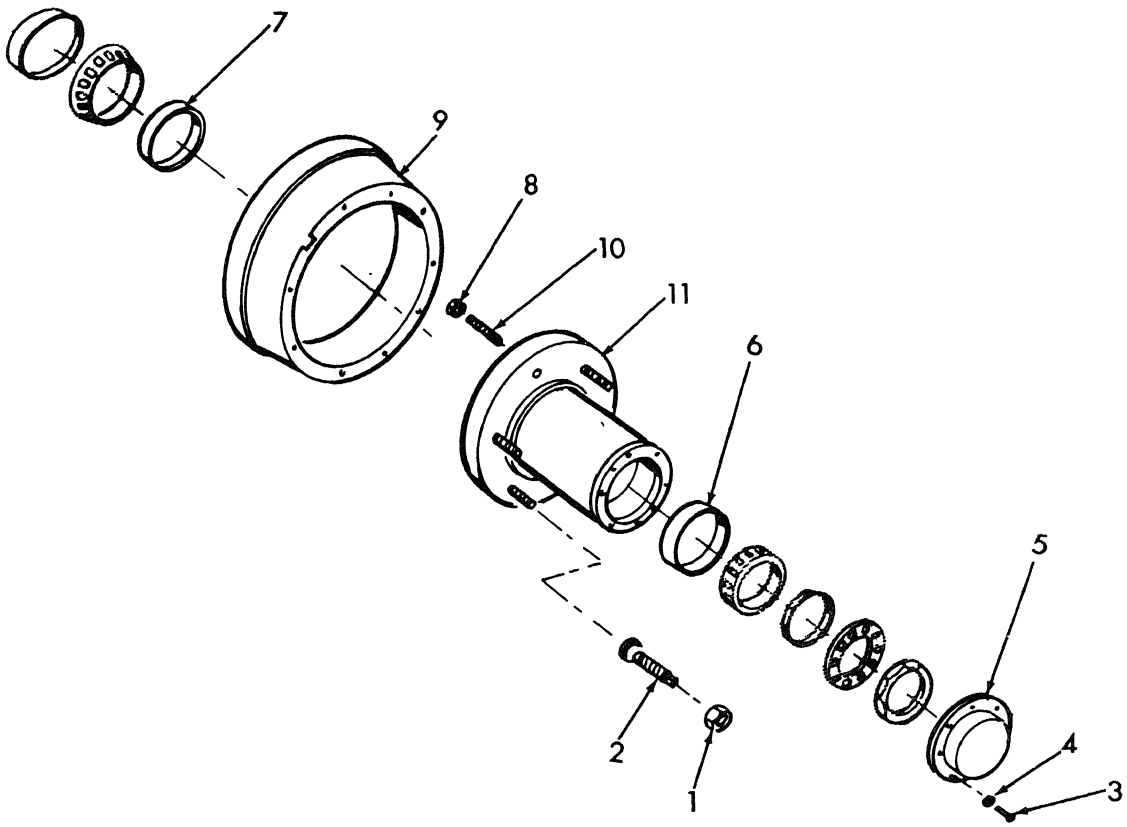

ME 3655-215-25P/

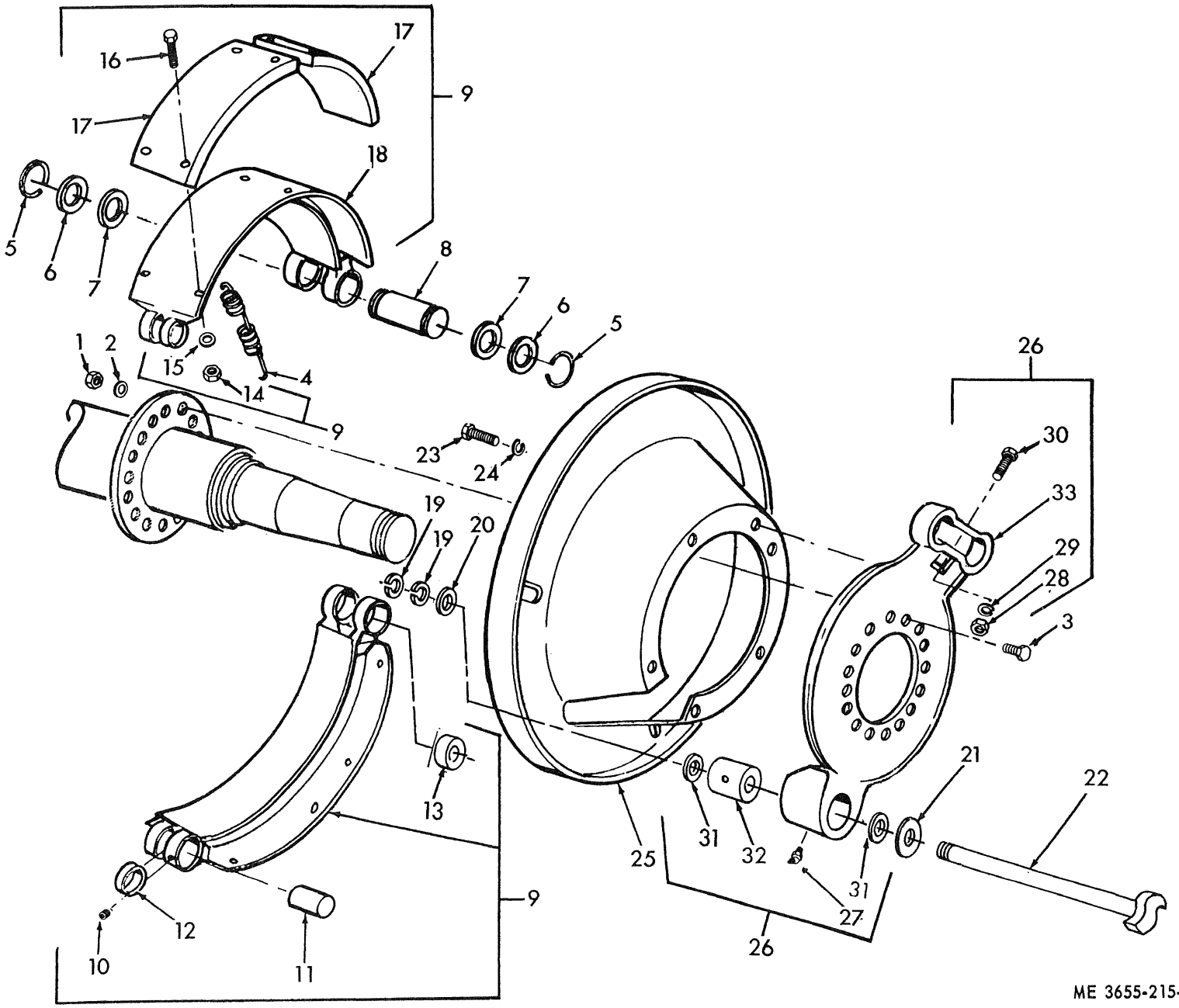

ME 3655-215-25P/40

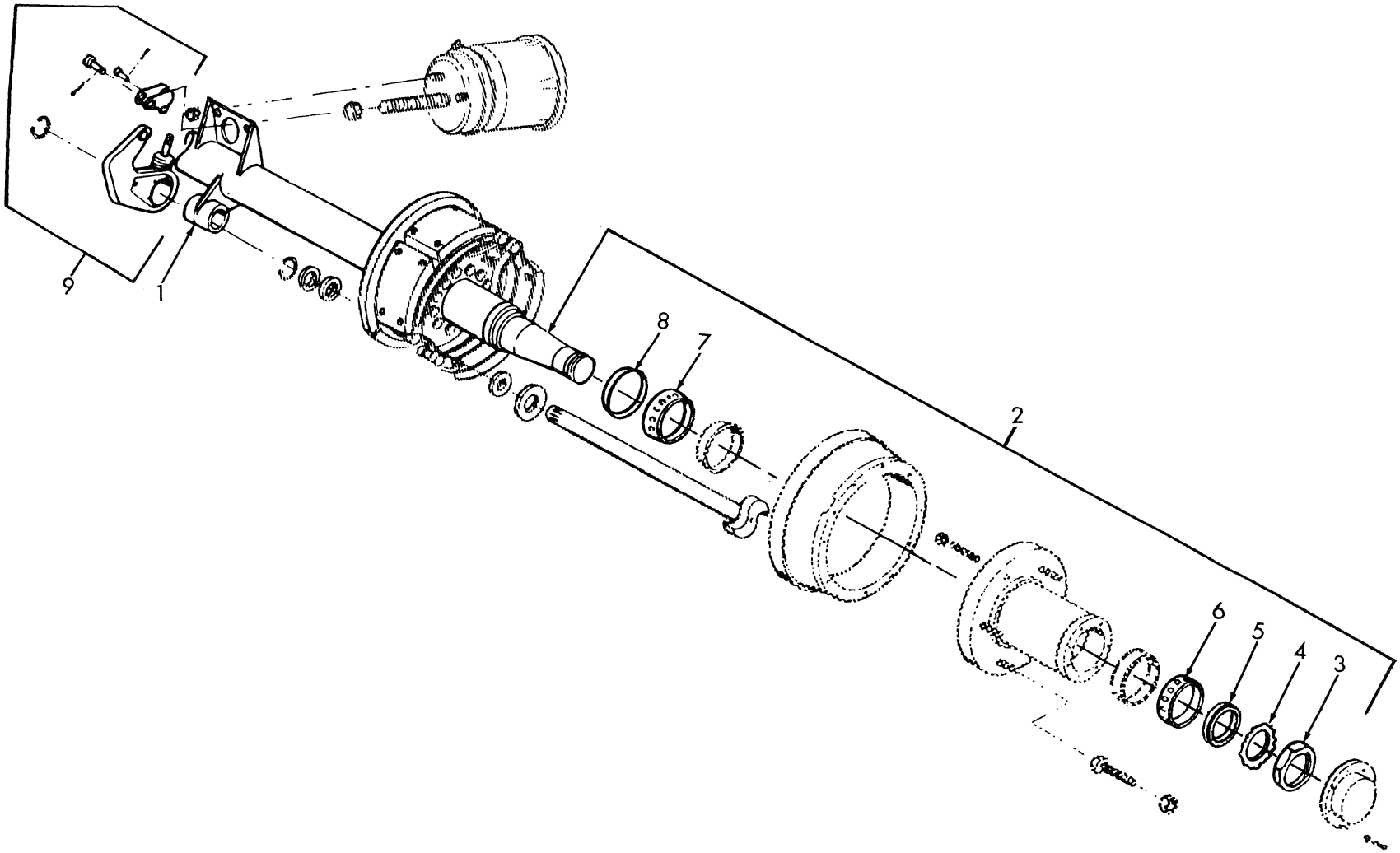

ME 3655-215-25P/41

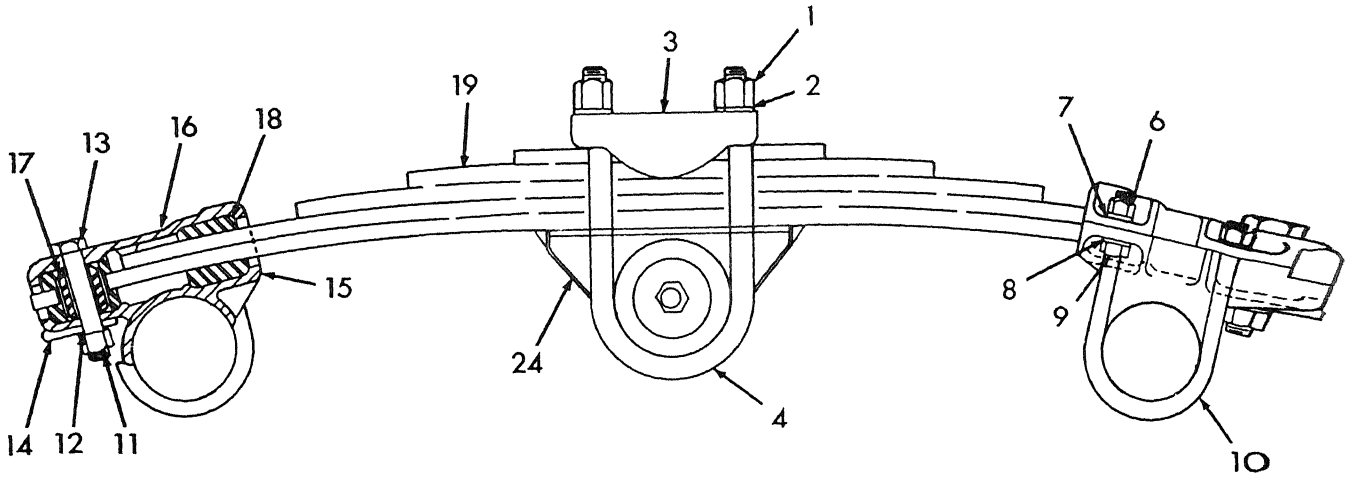
1
2
3
4
6
7
8
9
10
11
12
13
14
15
16
17
18
19
24

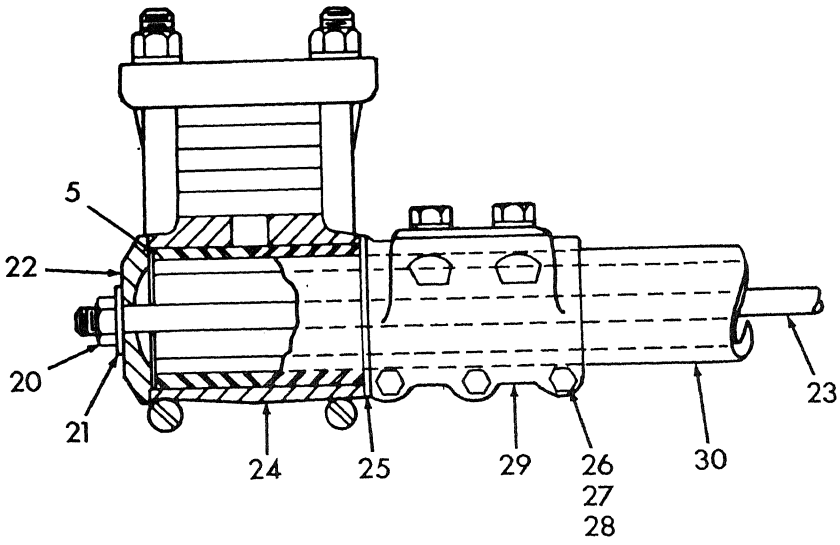
5
20
21
22
23
24
25
26
27
28
29
30

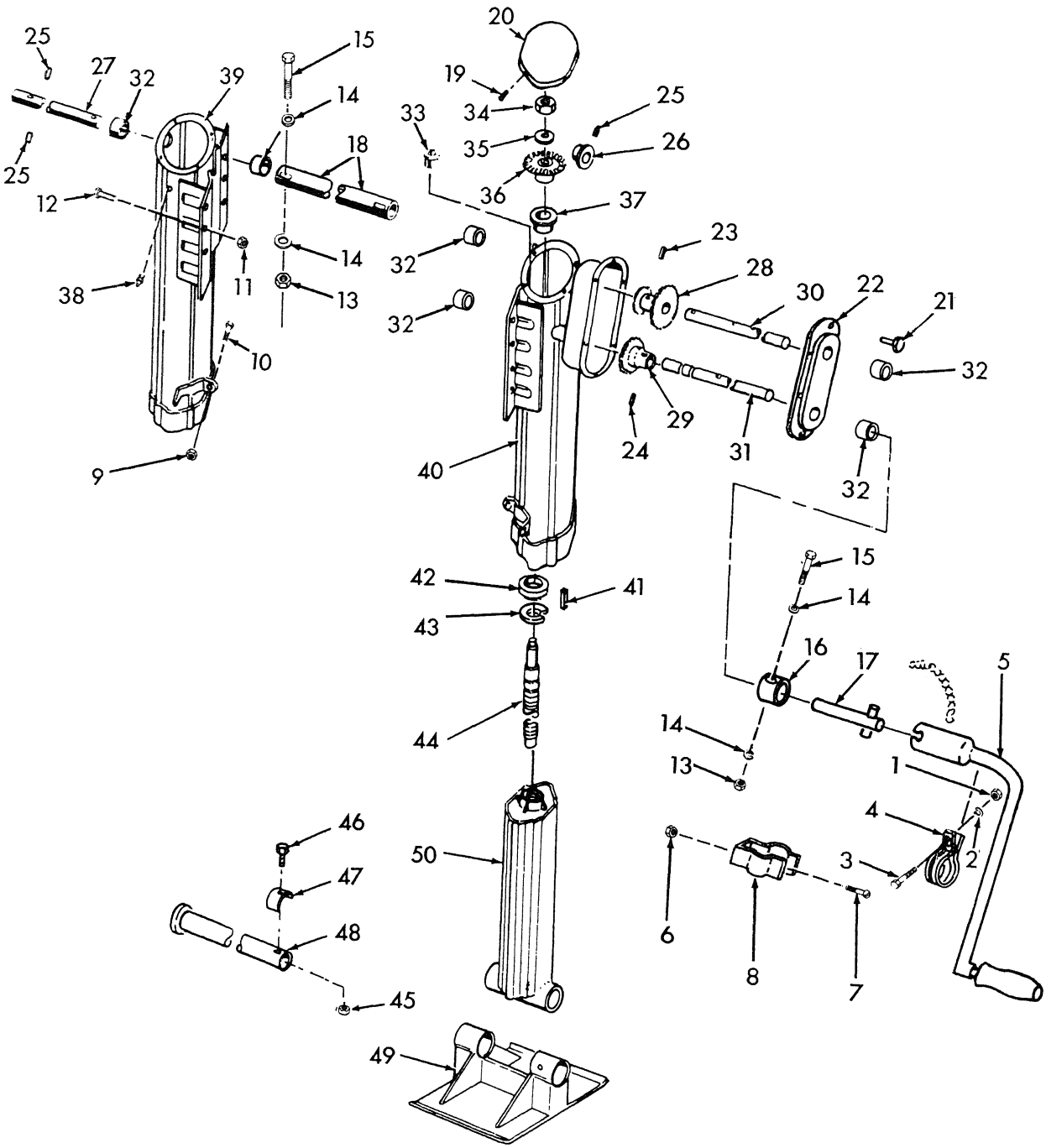
25
27
32
39
15
14
18
25
12
11
14
13
38
10
9
20
19
34
33
35
36
37
25
26
23
28
30
22
21
32
32
29
24
31
32
40
42
41
43
44
15
14
16
17
5
14
13
1
4
2
3
6
8
7
46
47
48
45
50
49

SECTION VII. INDEX-FEDERAL STOCK NUMBER AND REFERENCE NUMBER CROSS-REFERENCE TO FIGURE AND ITEM NUMBER

STOCK NUMBER	FIGURE NO.	ITEM NO.
2530-845-0385	43	-
2540-860-0575	28	4
2610-051-9450	27	8
2610-262-8653	27	7
2930-868-7683	15	13
3110-100-0335	39	7
3110-100-0670	41	7
3110-144-8603	22	19
3110-144-8622	16	28
3110-144-8637	22	20
3110-144-8648	16	21
3110-293-8997	39	6
3110-293-8998	41	6
3655-302-6149	12	10
4320-920-0113	15	14
4730-196-1504	35	2
4730-221-2143	26	5
4730-595-0083	35	1
5305-051-0827	3	19
5305-052-6923	24	5
5305-059-3660	43	7
5305-059-3664	33	5
5305-068-0500	22	9
5305-068-0502	22	1
5305-068-0502	22	4
5305-068-0505	2	10
5305-068-0505	11	5
5305-068-0506	18	6
5305-071-2234	21	1
5305-071-2242	3	1
5305-141-5152	5	22
5305-208-7879	5	34
5305-269-2800	43	46
5305-269-2803	2	3
5305-269-2803	10	3
5305-269-2805	15	3
5305-269-2808	35	13
5305-269-3211	20	4
5305-269-3211	21	8
5305-269-3211	22	22
5305-269-3213	5	1
5305-269-3213	5	32
5305-273-7352	5	19
5305-273-7352	5	21
5305-560-2151	5	26
5305-719-5240	12	6
5305-727-5677	43	10
5305-761-4227	43	12
5305-782-9495	23	2
5305-855-0966	27	1
5305-855-0966	29	1
5305-855-0966	30	1
5305-868-7680	15	10
5305-984-5688	31	1
5305-984-6193	5	11
5305-984-6211	33	1
5305-988-1727	32	2
5305-989-7434	5	7
5305-989-7435	2	5
5305-990-6444	5	4
5305-993-1851	4	2
5305-993-1851	33	4
5306-225-8499	43	3
5306-225-9081	28	2
5306-558-5419	11	13
5306-558-5419	11	21
5306-558-5419	13	7
5306-558-5419	17	7
5310-045-5001	3	20
5310-045-5001	11	11
5310-045-5001	11	19
5310-045-5001	13	5
5310-045-5001	17	5
5310-056-3395	5	2
5310-056-3395	5	29
5310-067-9507	43	11
5310-080-6004	2	2
5310-080-6004	6	3
5310-080-6004	10	2
5310-080-6004	13	2
5310-080-6004	15	2
5310-080-6004	18	3
5310-080-6004	35	12
5310-088-1251	32	1
5310-225-6408	43	9
5310-407-9566	43	2
5310-550-1130	21	2
5310-582-5965	3	2
5310-582-5965	18	7
5310-582-5965	22	2
5310-582-5965	22	5
5310-582-5965	22	10
5310-582-5965	26	2
5310-637-9541	6	2
5310-637-9541	18	2
5310-637-9541	20	2
5310-637-9541	20	8
5310-637-9541	21	6
5310-637-9541	22	23
5310-732-0558	20	1
5310-732-0558	20	7
5310-732-0558	21	5
5310-761-6882	23	4
5310-761-6882	25	1
5310-761-6882	26	1
5310-763-8920	11	10
5310-763-8920	11	18
5310-763-8920	13	4
5310-763-8920	17	4
5310-768-0318	23	1
5310-809-4058	2	9
5310-809-4058	3	3
5310-809-4058	5	37
5310-809-4058	11	4
5310-809-4058	18	8
5310-809-4058	24	6
5310-809-4058	25	2
5310-809-4058	26	3
5310-809-4061	20	3
5310-809-4061	21	7

REFERENCE NO.	MFG CODE	FIG. NO.	ITEM NO.	REFERENCE NO.	MFG CODE	FIG. NO.	ITEM NO.
MS21044N6	96906	13	1	MS35338-46	96906	21	6
MS21044N6	96906	15	1	MS35338-46	96906	22	23
MS21044N6	96906	18	1	MS35340-50	96906	3	20
MS21044N8	96906	12	4	MS35340-50	96906	11	11
MS21044N8	96906	43	6	MS35340-50	96906	11	19
MS21045-6	96906	35	11	MS35340-50	96906	13	5
MS24629-39	96906	27	1	MS35340-50	96906	17	5
MS24629-39	96906	29	1	MS35355-162	96906	11	13
MS24629-39	96906	30	1	MS35355-162	96906	13	7
MS24629-59	96906	24	5	MS35387-1	96906	27	5
MS27144-1	96906	38	3	MS35387-2	96906	27	4
MS27183-10	96906	2	9	MS35388-21	96906	27	7
MS27183-10	96906	3	3	MS35392-15	96906	27	8
MS27183-10	96906	5	37	MS35420-1	96906	29	4
MS27183-10	96906	11	4	MS35420-2	96906	29	4
MS27183-10	96906	18	8	MS35421-1	96906	29	4
MS27183-10	96906	24	6	MS35421-2	96906	29	4
MS27183-10	96906	25	2	MS35422-1	96906	29	5
MS27183-10	96906	26	3	MS35422-1	96906	29	5
MS27183-14	96906	2	2	MS35422-1	96906	29	5
MS27183-14	96906	6	3	MS35422-1	96906	29	5
MS27183-14	96906	10	2	MS35423-1	96906	29	2
MS27183-14	96906	13	2	MS35423-2	96906	29	2
MS27183-14	96906	15	2	MS35424-1	96906	29	2
MS27183-14	96906	18	3	MS35424-2	96906	29	2
MS27183-14	96906	35	12	MS35489-11	96906	35	14
MS27183-15	96906	20	3	MS35489-123	96906	35	9
MS27183-15	96906	21	7	MS35489-42	96906	33	8
MS27183-18	96906	12	5	MS35649-2252	96906	5	36
MS27183-22	96906	11	12	MS35649-2382	96906	5	2
MS27183-22	96906	11	20	MS35649-2382	96906	5	29
MS27183-22	96906	13	6	MS35746-1	96906	35	1
MS27183-22	96906	17	6	MS39062-2	96906	33	7
MS27183-8	96906	2	5	MS51330-1	96906	31	-
MS27183-8	96906	5	5	MS51331-3	96906	28	4
MS27183-8	96906	5	8	MS51922-1	96906	32	1
MS35206-245	96906	5	11	MS51922-37	96906	43	11
MS35206-264	96906	33	1	MS51922-53	96906	43	9
MS35206-283	96906	32	2	MS51922-9	96906	28	1
MS35206-308	96906	31	1	MS51953-25	96906	35	7
MS35207-261	96906	5	4	MS51958-64	96906	43	7
MS35207-263	96906	5	7	MS51958-68	96906	33	5
MS35207-264	96906	2	6	MS51967-14	96906	23	1
MS35207-267	96906	4	2	MS51967-2	96906	23	4
MS35207-267	96906	27	3	MS51967-2	96906	25	1
MS35207-267	96906	33	4	MS51967-2	96906	26	1
MS35333-40	96906	21	2	MS51967-20	96906	11	10
MS35335-162	96906	11	21	MS51967-20	96906	11	18
MS35335-162	96906	17	7	MS51967-20	96906	13	4
MS35338-44	96906	3	2	MS51967-20	96906	17	4
MS35338-44	96906	18	7	MS51967-5	96906	43	1
MS35338-44	96906	22	2	MS51967-8	96906	20	1
MS35338-44	96906	22	5	MS53004-1	96906	36	3
MS35338-44	96906	22	10	MS53044-6	96906	27	9
MS35338-44	96906	26	2	MS75021-1	96906	32	4
MS35338-45	96906	43	2	MS75021-2	96906	32	4
MS35338-46	96906	6	2	MS90725-111	96906	23	2
MS35338-46	96906	18	2	MS90725-164	96906	3	19
MS35338-46	96906	20	2	MS90725-17	96906	21	1
MS35338-46	96906	20	8	MS90725-3	96906	22	9

REFERENCE NO.	MFG CODE	FIG NO.	ITEM NO.	REFERENCE NO.	MFG CODE	FIG NO.	ITEM NO.
MS90725-34	96906	43	3	08-203234	90914	43	19
MS90725-36	96906	28	2	08-203242	90914	43	21
MS90725-6	96906	22	1	08-203258	90914	43	23
MS90725-6	96906	22	4	08-203285	90914	43	24
MS90725-60	96906	20	4	08-203419	90914	43	25
MS90725-60	96906	21	8	08-203421	90914	43	14
MS90725-60	96906	22	22	08-203422	90914	43	43
MS90725-62	96906	5	1	08-203425	90914	43	41
MS90725-62	96906	5	32	08-203427	90914	43	15
MS90725-9	96906	3	1	08-203429	90914	43	34
MS90726-111	96906	43	12	08-203450	90914	43	35
MS90726-162	96906	43	10	08-203451	90914	43	42
MS90726-5	96906	2	10	08-203587	90914	43	13
MS90726-5	96906	11	5	08-203587	90914	43	45
MS90726-57	96906	43	46	1A3421-1401	22508	7	1
MS90726-6	96906	18	6	1A3522-2412	22508	7	3
MS90726-60	96906	2	3	1A4219-1506	22508	7	6
MS90726-60	96906	10	3	1A5180-1401	22508	7	14
MS90726-62	96906	15	3	1A6842-1401	22508	7	16
MS90726-65	96906	35	13	1A7172-1201	22508	7	10
MS90727-117	96906	12	6	1A7352-1899	22508	7	11
M13486-1-5	81348	38	5	1A9447-1899	22508	7	7
NAS1251A25-16	80205	27	10	1B3271-1401	22508	7	13
NO6BARE	83209	1	6	1C4157-0699	22508	7	25
N3198AA	06721	36	1	1E3960-1899	22508	7	23
RE42	15235	3	34	1E4539-1401	22508	7	8
RS91-440	80328	34	16	1E7952-1401	22508	7	5
RS91-444	80328	34	17	1E7957-1401	22508	7	2
SK1114	79221	3	21	1H3877-2409	22508	7	4
STB100	03743	3	17	1INCHTELLERETTE	16605	24	8
STB100	03743	3	28	1R5376-1401	22508	7	24
STB9075	03743	3	25	1R5380-000A	22508	7	26
STG100	03743	3	29	1R5382-1898	22508	7	22
STG75	03743	3	26	1R5383-0699	22508	7	18
SU02-098	80328	28	3	1R5388-3516	22508	7	27
SW96	73631	5	20	1V3678-0510	22508	7	20
S120380	98343	37	49	1V3684-1509	22508	7	21
S121893	98343	37	48	10081	90598	18	9
S121940	98343	37	46	10087	90598	11	6
S121954	98343	37	47	10088-1	90598	15	4
S225831	98343	37	7	10090-1	90598	12	7
TYPETWCLASS2KINDC				10091-1	90598	2	12
10AWG600V	81348	3	14	10091-101	90598	2	
TYPETWCLASS2KINDC				10091-2	90598	2	11
14AWG600V	81348	3	16	10092-1	90598	6	4
TYPETWCLASS2KINDC				10092-2	90598	13	3
6AWG600V	81348	3	15	10092-2	90598	18	4
TYPE1PCPSR6-60LB	38508	11	7	10094-1-11	90598	6	16
TYPE1PCPSR6-60LB	38508	18	10	10094-1-12	90598	6	28
T38	15235	3	32	10094-1-13	90598	6	9
WT1S10T1LA	79500	4	11	10094-1-15	90598	6	18
WWN351TYPE1	81348	35	2	10094-1-17	90598	6	15
X448	15235	3	35	10094-1-22	90598	6	6
0TTH3	79500	4	3	10094-2-102	90598	17	10
0V0380-1401	22508	7	17	10094-2-103	90598	18	15
000998-1201	22508	7	9	10095-1-102	90598	11	23
006630-1201	22508	7	12	10095-1-103	90598	11	17
08-202235	90914	43	38	10095-2-102	90598	13	11
08-202445	90914	43	32	10095-3-101	90598	10	5
08-202448	90914	43	37	10096-16	90598	3	30

REFERENCE NO.	MFG CODE	FIG. NO.	ITEM NO.
10096-17	90598	3	18
10096-18	90598	3	24
10096-18	90598	3	33
10096-3	90598	3	27
10096-3	90598	3	38
10096-9	90598	3	36
10098-101	90598	1	1
103102-001	56697	41	3
103103-002	56697	41	5
10311	98343	35	4
105107	56697	41	4
106999-019	56697	41	8
10708	09386	39	2
10709	09386	39	2
10900665	19207	38	2
116-0235-010	04579	15	17
117-101	33438	4	-
117-101-2	33438	5	12
117-101-3	33438	5	9
117-101-4	33438	5	33
117-101-5	33438	5	30
117-101-6	33438	5	38
117-101-7	33438	5	41
117-101-8	33438	5	39
117-101-9	33438	5	35
1175126	98343	37	42
1175128	98343	37	43
1175160	98343	37	59
1175301	98343	37	52
1175303	98343	37	63
1175304	98343	37	60
1175305	98343	37	55
1175307	98343	37	57
1175308	98343	37	53
1175309	98343	37	28
1175313	98343	37	50
1175314	98343	37	19
1175314B	98343	37	18
1175315	98343	37	61
1175317	98343	37	30
1175318	98343	37	51
1175382	98343	37	38
1175399	98343	37	58
11784B	98343	36	4
1178455B	98343	37	29
119-1	74410	34	7
120-2	74410	34	8
121565-048	98343	36	2
127	74410	34	5
128	74410	34	3
130-3X9	78824	11	24
130-4X9	78824	13	9
13988	09386	39	10
13989	09386	39	10
140	79470	13	12
143933	98343	37	45
155105	98343	37	37
160204	98343	37	62
1613B	95879	40	27
166013	98343	37	56
166066	98343	37	54
1662	08108	30	3
168-0251-113	04579	15	10
168-0380-359	04579	15	15
168-0488-080	04579	15	6
17-10014-12	94222	4	12
17-10015-13	94222	5	40
17-11-104-11	94222	4	13
171F1-1-4	22508	7	-
175113	98343	37	16
175125	98343	37	44
175128-1	98343	37	41
175129	98343	37	40
175149	98343	37	15
175175	98343	37	20
175176	98343	37	17
175180	98343	37	27
175181	98343	37	26
175186	98343	37	32
175190	98343	37	33
175315A	98343	37	35
175322	98343	37	31
175377	98343	37	34
175387	98343	37	36
175388	98343	37	39
177602	98343	37	24
177602A	98343	37	23
177604	98343	37	22
177606	98343	37	21
177607	98343	37	25
180-1534-010	04579	15	8
1830	98343	37	14
193003	98343	37	9
193008	98343	37	4
193009	98343	37	3
193012	98343	37	6
193013	98343	37	10
193205A	98343	37	11
193206	98343	37	13
193207	98343	37	12
194001A5	98343	37	5
194002	98343	37	1
194003-5	98343	37	2
194010	98343	37	8
196	74410	34	6
199302	56697	41	2
2-7MDCRS	76526	11	9
2-7MDCRS	76526	18	11
2PSWT12	73631	5	17
2PSWT16	73631	5	16
2PSWT8	73631	5	18
2R5373-1201	22508	7	15
2V2757-1201	22508	7	19
2V3681-1404	22508	7	28
20-1	33533	10	6
20-2	33533	10	7
20-3	33533	10	8
20-4	33533	10	9
200100-001	56697	40	33
200999-001	56697	40	26

SECTION VII. INDEX-FEDERAL STOCK NUMBER AND REFERENCE NUMBER CROSS-REFERENCE TO FIGURE AND ITEM NUMBER (Continued)

REFERENCE NO.	MFG CODE	FIG NO.	ITEM NO.	REFERENCE NO.	MFG CODE	FIG NO.	ITEM NO.
201110-001	56697	40	18	29-040831	90914	43	39
201999-014	56697	40	9	29-040832	90914	43	40
202100-205	56697	40	22	29-059861	90914	43	48
203100-001	56697	40	8	298618	23705	32	3
204P019H11FAN1	79500	4	5	299004	56697	40	
204P019H11FAN2	79500	4	6	3-1-2X5-3-8X1-16	80996	17	8
204P019H11FAN3	79500	4	7	300126-001	56697	39	11
204P019H11FAN4	79500	4	8	304SS020	03933	8	2
204P019H11WATERHEATER	79500	4	10	304104	56697	39	5
204P019H11WATERPUMP	79500	4	9	3060301-002	56697	39	9
204100-001	56697	40	12	30736	71951	30	11
204514	06853	35	10	364-0446-457	04579	15	9
205100-001	56697	40	11	37891	09386	39	1
208100	56697	40	4	37892	09386	39	1
209999-004	56697	41	1	380	15235	3	10
211102-001	56697	40	25	394SIZE4IN	14959	13	13
213113-001	56697	40	17	3991207	56697	39	
214100	56697	40	5	4-1-2X6-7-8X1-16	80996	11	14
215TFR608BB	38151	15	19	4-1-2X6-7-8X1-16	80996	11	22
215540	06853	35	5	4-1-2X6-7-8X1-16	80996	13	8
217799	06853	35	3	400101	56697	40	10
2469X1-1-4-1	76873	9	11	400102	56697	40	16
2469X1-1-4-10	76873	9	2	400128	56697	39	3
2469X1-1-4-11	76873	9	1	400128	56697	40	23
2469X1-1-4-2	76873	9	10	401101	56697	40	30
2469X1-1-4-3	76873	9	9	401113	56697	40	3
2469X1-1-4-4	76873	9	7	402100	56697	40	14
2469X1-1-4-5	76873	9	8	402102	56697	40	28
2469X1-1-4-6	76873	9	6	402106	56697	40	1
2469X1-1-4-7	76873	9	5	402109	56697	39	8
2469X1-1-4-8	76873	9	4	403100	56697	40	15
2469X1-1-4-9	76873	9	3	403101	56697	40	6
2469X2-1	76873	19	11	403105	56697	40	20
2469X2-10	76873	19	2	403108	56697	40	21
2469X2-11	76873	19	1	403113	56697	40	29
2469X2-2	76873	19	6	403115	56697	39	4
2469X2-3	76873	19	8	403115	56697	40	24
2469X2-4	76873	19	3	403117	56697	40	2
2469X2-5	76873	19	7	405101	56697	40	13
2469X2-6	76873	19	10	405106	56697	40	32
2469X2-7	76873	19	9	408100	56697	40	31
2469X2-8	76873	19	5	409100	56697	40	7
2469X2-9	76873	19	4	42012	71951	30	2
2550-6	00624	35	6	43-00348-004	51064	20	6
29-000979	90914	43	16	4343	90914	43	5
29-003552	90914	43	44	43546	71951	30	5
29-003711	90914	43	47	44006	71951	30	8
29-003764	90914	43	36	444-1801-208	04579	15	12
29-003841	90914	43	28	45002	71951	30	7
29-003842	90914	43	29	45751	71951	30	10
29-003946	90014	43	20	46087	71951	30	4
29-004084	90914	43	50	47A1838	01364	33	6
29-004150	90914	43	31	472-0105-107	04579	15	13
29-004151	90914	43	30	47202	71951	30	12
29-004152	90914	43	27	4750MS2-20T0240	76526	11	2
29-004181	90914	43	33	4750MS2-20T0240	76526	18	5
29-004182	90914	43	22	480	15235	3	12
29-004398	90914	43	18	48001	71951	30	6
29-004491	90914	43	17	50-1-4IN	73124	12	31
29-037561	90914	43	26	50-10-4IN	73124	12	25

REFERENCE NO.	MFG CODE	FIG. NO.	ITEM NO.
50-11-4IN	73124	12	26
50-12-4IN	73124	12	9
50-13-4IN	73124	12	8
50-14-4IN	73124	12	13
50-15-4IN	73124	12	23
50-16-4IN	73124	12	22
50-18-4IN	73124	12	30
50-19-4IN	73124	12	29
50-2-4IN	73124	12	24
50-20-4IN	73124	12	12
50-21-4IN	73124	12	28
50-22-4IN	73124	12	11
50-23-4IN	73124	12	14
50-24-4IN	73124	12	15
50-25-4IN	73124	12	16
50-3-4IN	73124	12	21
50-4-4IN	73124	12	20
50-4IN	73124	12	-
50-5-4IN	73124	12	19
50-6-4IN	73124	12	18
50-7-4IN	73124	12	17
50-8-4IN	73124	12	10
50-9-4IN	73124	12	27
5003-4336	13050	5	6
50186	71951	30	-
51	08108	4	4
5100-150	79135	40	19
51023	71951	30	9
5936190	73331	31	4
6KW	56308	24	2
600-0095-087	04579	15	16
600-0096-087	04579	15	5
653	60038	39	7
663	60038	41	7
6660	79470	10	4
6660	79470	12	1
676-1550-208	04579	15	7
7056700	19207	38	4
7078-1	75375	26	6
7078-10	75375	25	5
7078-14	75375	23	5
7078-16	75375	23	3
7078-20	75375	25	4
7078-3	75375	20	9
7078-5	75375	20	5
7078-8	75375	26	4
7078-9	75375	24	1
7118-1	75375	24	3
7118-4	04257	24	4
7118-5	75375	24	7
712-1004-764	04579	15	14
725539-09	35197	21	3
73192	92940	21	10
73192ROT	92940	22	21
73192STA	92940	22	25
7320641	19207	31	3
7320658	73331	31	6
7525997	73331	31	8
7526018	73331	31	5
760-1	74410	34	-
761	74410	34	11
762	74410	34	13
764	74410	34	15
764-1002-478	04579	15	18
765	74410	34	12
766	74410	34	10
767	74410	34	9
770-1	74410	34	4
771	74410	34	2
77204	29337	22	19
77206	29337	22	20
773	74410	34	1
77505	38151	16	28
77507	38151	16	21
775855-02	35197	21	9
78	74410	34	14
78307667	35197	21	4
81003	54713	41	9
8742391	19207	38	1
908-500-113	04579	15	11

PARTS NOT ILLUSTRATED

STOCK NUMBER	PAGE
2530-115-3944	44
2530-835-4452	45

REFERENCE NO.	MFG CODE	PAGE
1175166	98343	45
1175450	98343	44
1178450	98343	44
175055	98343	45
19030	56697	38
7078	75375	28

y Order of the Secretary of the Army:

W. C. WESTMORELAND,
General, United States Army,
Chief of Staff

fficial:

KENNETH G. WICKHAM,
Major General, United States Army,
The Adjutant General

istribution:

To be distributed in accordance with DA Form 12–25, Sec I (qty rqr Block #126), Organizaional maintenance for Equipment: Gas Generating.

☆U.S. GOVERNMENT PRINTING OFFICE : 1989 O - 242-451 (5333)